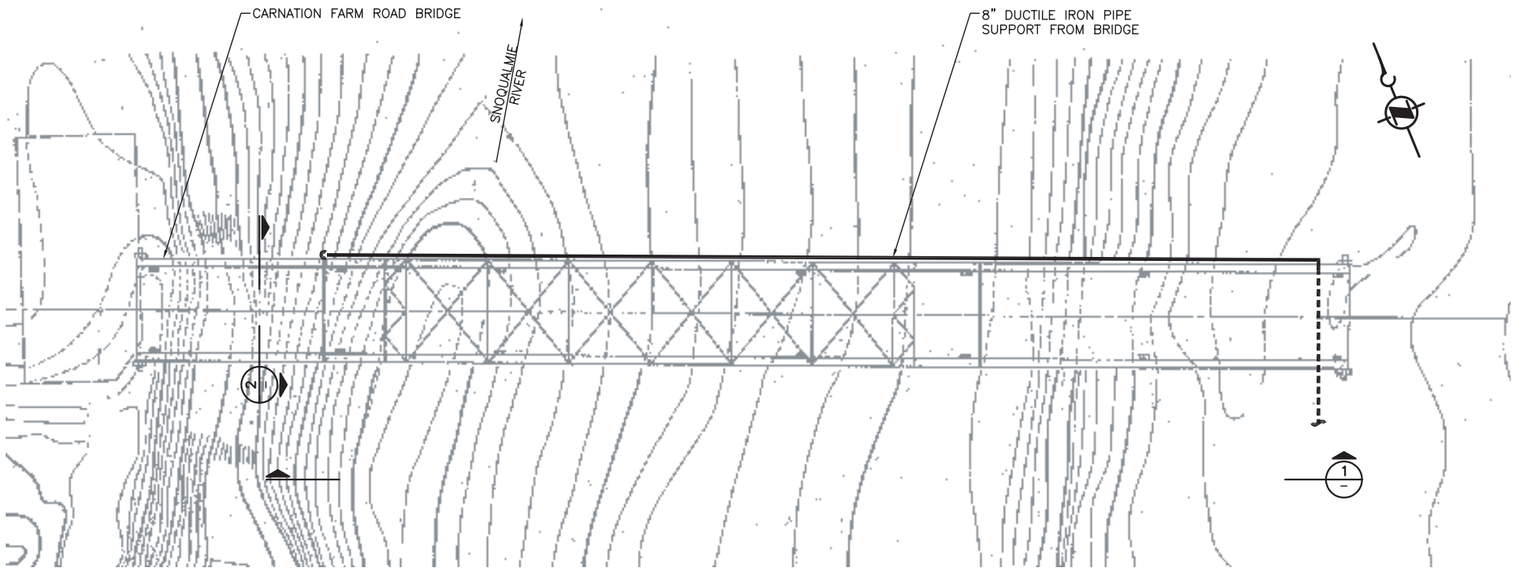


CARNATION FARM ROAD BRIDGE

PLAN

SCALE: 1" = 40'

## GENERAL NOTES:

1. CARNATION FARM ROAD BRIDGE AND RIVER PROFILES PREPARED IN APRIL 1950. ELEVATIONS SHOWN ARE BASED ON NAVD 88 DATUM.

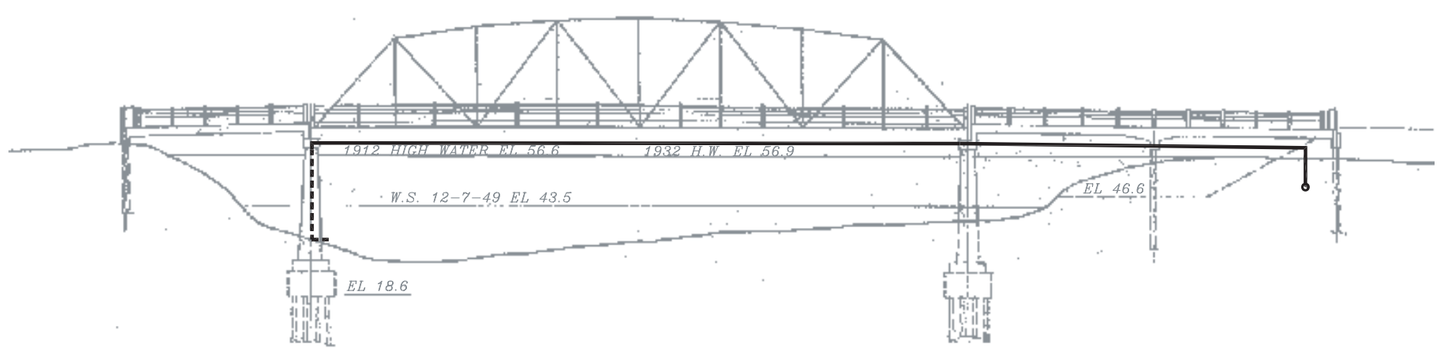


BRIDGE

ELEVATION (1)

SCALE: 1" = 40'

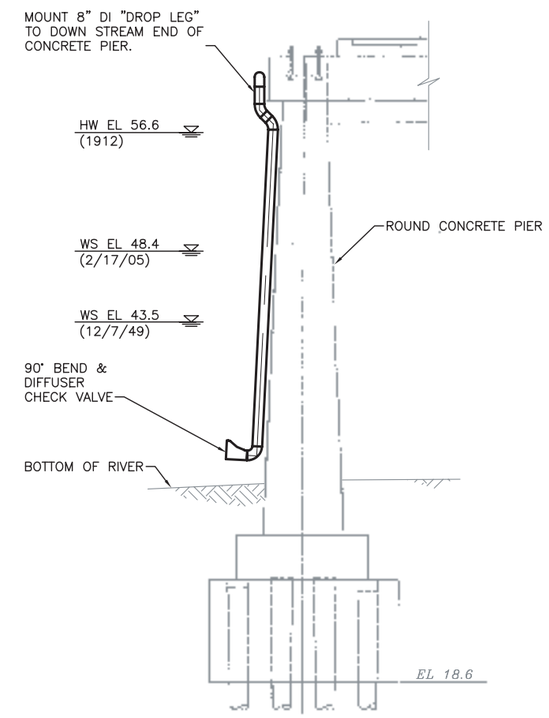


PIER

ELEVATION (2)

SCALE: 1" = 10'

ONE INCH

AT FULL SIZE, IF NOT ONE INCH SCALE ACCORDINGLY

| No. | REVISION | BY | APP'D | DATE |
|---|---|---|---|---|

carollo engineers

DESIGNED: SEF | CHECKED: NONE
DRAWN: SML | SCALE:
RECOMMENDED:
APPROVED: | CONTRACT NO: C_____C

King County

DEPARTMENT OF NATURAL RESOURCES & PARKS
CARNATION WASTEWATER TREATMENT FACILITY

**FIGURE 3**
CONCEPTUAL
RIVER OUTFALL DISCHARGE

DATE:
FILE NO: 423557/###
DRAWING NO:
SHEET NO: OF

H:\Client\KingCo-DNR_SEA\66200010\Div\Dwg\FIGURE_2 3-22-05 03:15pm sfraker XREFS: D-TTL-KC-CARN BRIDGE_ELEV; BRIDGE_PLAN; PIER;