Quarterly Report No. 4

King County
Fuel Cell Demonstration Project

Quarters 2 and 3, 2005

Prepared for

US EPA

January 2006

Prepared by

King County
Seattle, WA
and
CH2MHILL
CH2M HILL
1100 112th Avenue SE, Suite 400
Bellevue, WA 98004

Table of Contents

Background **1**
Project Goals and Team 1
Fuel Cell Supply Gas Summary 1

Fuel Cell Performance Review **3**
Quarterly Summary 3
Fuel Cell Stack Replacement 3
Emission Sampling 4
Noise Measurements 5
Digester Gas Compressor Cooling Water 7
Inlet Gas Supply Switchover 7
Carbonyl Sulfide Vessel 7
Power Plant Components 8
Natural Gas Treatment System 8
Fuel Cell Stack 8
Waste Heat Recovery Unit 8
Mechanical Balance of Plant (MBOP) 8
Electrical Balance of Plant (EBOP) 8
Electrical and Thermal Efficiency 9
Cumulative Performance Summary 11
Performance Goals and Metrics 12

Operations and Maintenance **15**
Training 15
Operations 15
Maintenance 15

Publications **17**

Awards **19**

Appendices

A. EFFICIENCY AND OUTPUT DATA
B. SOURCE EVALUATION REPORT
C. NOISE MEASUREMENT REPORT

Background

Project Goals and Team

This Quarterly Report for the King County Fuel Cell Demonstration Project is intended to provide information regarding the experience gained from the operation of the fuel cell as well as performance data. The Quarterly Reports will be submitted throughout the two-year demonstration period, June 2004 – June 2006. The project has two objectives:

(1) Demonstrate molten carbonate fuel cell technology can be adapted to use anaerobic digester gas as a fuel source; and
(2) Achieve a nominal plant power output target of 1 MW (net AC) using either digester gas or natural gas/scrubbed digester gas.

The participants in this project are:

- King County
- FuelCell Energy, Inc.
- U.S. Environmental Protection Agency
- CH2M HILL
- Brown and Caldwell
- Hawk Mechanical

In cooperation with the U.S. Environmental Protection Agency and FuelCell Energy, Inc., King County is sponsoring the world's largest demonstration project of a molten carbonate fuel cell (MCFC) using digester gas; the fuel cell's nominal capacity is one megawatt. A portion of the waste heat from the fuel cell exhaust will be integrated into the existing heat distribution system, offering further efficiency. CH2M HILL and Brown and Caldwell are assisting King County in the coordination and management of the overall project. CH2M HILL and Brown and Caldwell have direct responsibility for monitoring and reporting of project status, design and utility interface, assistance during construction, start-up, testing, analysis, and reporting of the results of the demonstration project.

Fuel Cell Supply Gas Summary

To simplify the report presentation, the description of the inlet gas supplies has been revised. The fuel cell is connected to two independent fuel supplies: natural gas (NG) and raw anaerobic digester gas (DG). The fuel cell operates on only one gas supply at any given time, and is capable of automatically switching between the two. The fuel cell requires approximately 147 cubic feet per minute (cfm) of NG to achieve the rated output; approximately 227 cfm of DG is required to achieve the rated output. Natural gas is provided by either the wastewater treatment plant via a gas scrubbing system that cleans raw digester gas to pipeline quality natural gas (formerly labeled Gas 1) or the local utility (formerly labeled Gas 2). Digester gas (formerly labeled Gas 3) is supplied directly from the anaerobic digester gas collection header.

Fuel Cell Performance Review

The fuel cell began operating in June of 2004. This report covers Quarters 2 and 3 of 2005 (Q2 & Q3-2005).

Quarterly Summary

The fuel cell operated on both digester gas and natural gas. The waste heat recovery unit ran intermittently during the quarter. Emission, water quality, and noise data were collected. Condensation from the digester gas entered the digester gas compressor, and possibly the fuel cell vessel, resulting in the need for a new fuel cell stack module. The fuel cell remained idle the remainder of the reporting period due to construction at the treatment plant. A chronology of operations is shown below.

01Apr05 – 07May05	Operated on NG due to failed Coriolis flow element FE800 (see Report 3 for details)
07May05	Commissioned and operated with thermal mass flow element as DG flow control
07May05 – 23Jun05	Operated on DG as much as site conditions allowed
12-13May05	Collected process water samples
08Jun05	Collected digester gas emission samples
14Jun05	Collected noise data
15Jun05	Condensation enters the gas compressor
16Jun05 – 24Jun05	Plant runs at 350kW on natural gas
24Jun05	Temporary loss of natural gas
24Jun05 – 27Jun05	Plant shutdown to prepare for fuel cell module swap out
11Jul05 - 22Jul05	New stack module installed and tested
22Jul05-30Sep05	Fuel cell idle due to other construction at the site

Fuel Cell Stack Replacement

On June 14, the fuel cell plant tripped off line as a result of excessive water in the DG fuel supply. The volume of water exceeded the design limits of the existing water separation system (knock out drum) ahead of the gas compressor, filling the compressor with water. The secondary knock out drum (downstream of the compressor) did not fill completely; it did, however, capture a significant amount of water.

The fuel cell plant was restarted on natural gas. During the power ramp, conditions indicative of a fuel system imbalance on one of the four fuel cell stacks were observed. The condition was monitored and evaluated. Based upon fuel cell performance, it was determined that an operating point of 350kW could be sustained while the appropriate corrective actions were investigated.

On June 24, the plant responded to a loss of fuel and tripped off line. It was established that the loss of fuel coincided with King County's commissioning of the new COS vessel in the natural gas supply line. Following this event, the plant was returned to operation and a ramp up on natural gas was initiated. Alarm conditions for fuel cell temperature and voltage deviations within the fuel cell received during the return to power reflected that the suspected fuel imbalance condition worsened. It was determined that return to power operations may result in damage to the fuel cell stack, and therefore steps were taken immediately to cool down the plant (to prevent further damage to the fuel cell stack).

The decision was made that the best course of action was to replace the fuel cell module. A new vessel would allow a more detailed evaluation of the previous stack's condition, prevent damage, and provide input to the design of future units. To minimize downtime, replacement was schedule to coincide with a planned fuel cell outage related to the King County turbine project.

FuelCell Energy arranged to exchange the fuel cell module with one held in reserve. The schedule for the replacement was established for the most part with shipping logistics driving the schedule. With the shutdown occurring just prior to the July 4th holiday, shipping of the replacement module was held to July 5, to avoid logistical issues associated with the holiday weekend. Construction trades were mobilized to remove the installed module on July 11, and to set the replacement module in place on July 12. Installation of the replacement module was completed on July 25. Plans to restart the fuel cell were suspended due to the planned outage related to King County's turbine project; the construction associated with the project shutoff gas and electric supplies. The outage continued through the end of the reporting period.

The previous fuel cell module was shipped to FuelCell Energy and disassembled to determine the root cause of the fuel system imbalance. A detailed internal inspection of the module and manifold confirmed the existence of breaches in the gaskets. The gaskets were compromised due to pressure and temperature transients within the stack module caused by the high frequency of trips and operational upsets.

The module has been evaluated, repaired, and design improvements have been incorporated. It is available as a spare to permit fast response to any future events.

Emission Sampling

Emission sampling was conducted on June 8, 2005; three samples were taken while the fuel cell operated on digester gas. The exhaust gas concentrations are shown in Figure 1, along with the values previously measured while operating on natural gas. The concentration of NOx averaged only 0.20ppm, 90% below the project goal; the NOx concentration was also below that observed while operating on natural gas. No non-methane hydrocarbons were detected.

Two compounds measured higher than expected in the exhaust gas: carbon monoxide and methane. Carbon monoxide concentrations averaged 13 ppm, exceeding the project goal by 30%; carbon monoxide concentrations when operating on digester gas were two and one-half times higher than when operating on natural gas. Methane was also detected in the

exhaust gas; concentrations averaged 287 ppm. Siloxane samples on the inlet digester gas were also collected. Five samples were collected and all measured below the detection limit. Sampling details are provided in Appendix B.

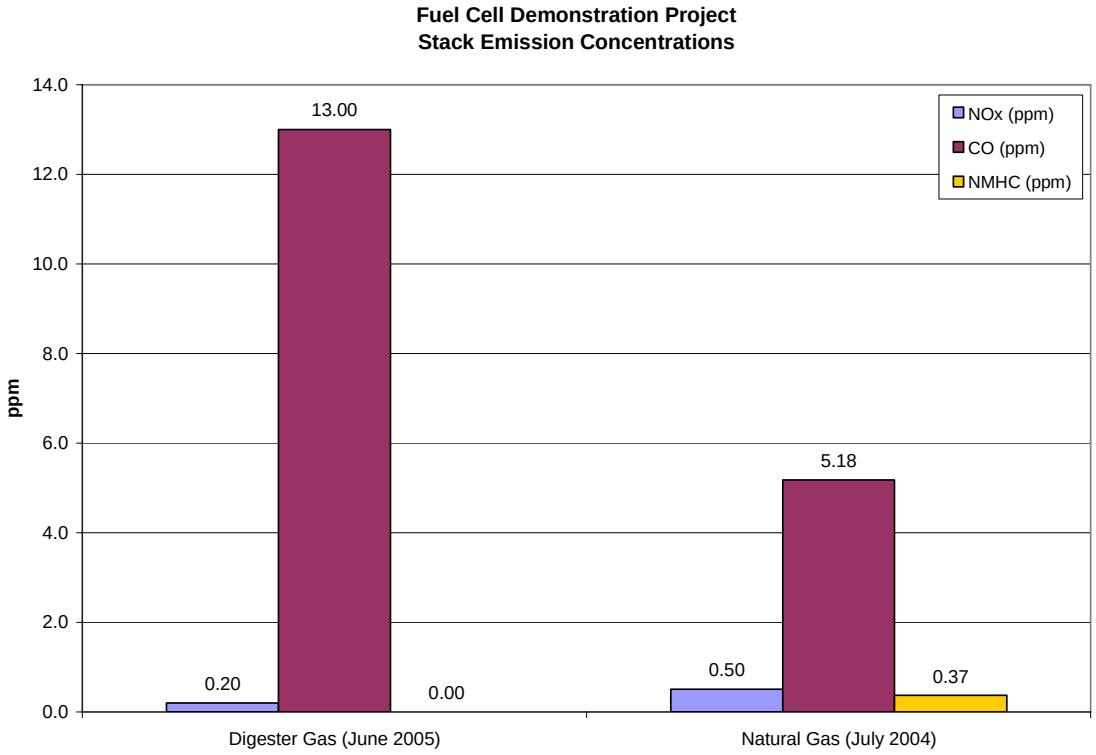

Figure 1 - Stack Emission Data

Noise Measurements

Noise measurements were taken on June 14. The measurements were taken in the vicinity of the fuel cell at a distance of 10 feet and 100 feet from the noise sources while operating on digester gas. Locations of the measurements are presented on the enclosed sketch, schematically. Two series of measurements were taken: Waste Heat Recovery Fan (WHR Fan) on and Waste Heat Recovery Fan off.

Table 1 - Measured Sound Pressure Levels (Operating on Digester Gas), dBA

Location	*Distance to Noise Source*	*Measurement Condition*		*Dominant Source w/ WHR Fan On*	*Dominant Source w/ WHR Fan Off*
		WHR Fan on	WHR Fan off		
1	10 feet	76.5 dBA	61.5 dBA	WHR Fan	Remaining Sources
2	10 feet	73.5 dBA	70.8 dBA	Digester Gas Compressor	Digester Gas Compressor
3	10 feet	74.5 dBA	69.9 dBA	Digester Gas Compressor	Digester Gas Compressor
4	10 feet	63.5 dBA	60.6 dBA	EBOP	EBOP
5	100 feet	62.5 dBA	57.8 dBA	WHR Fan	Remaining Sources
6	100 feet	66.4 dBA	59.6 dBA	Digester Gas Compressor	Digester Gas Compressor
7	10 feet	76.9 dBA	74.4 dBA	AGO Fan	AGO Fan
8	100 feet	60.5 dBA	60.4 dBA	AGO Fan, Digester Gas Compressor	AGO Fan, Digester Gas Compressor
9	100 feet	60.9 dBA	58.5 dBA	Fuel Cell Equip.	Fuel Cell Equip.

Figure 2 - Noise Measurement Locations

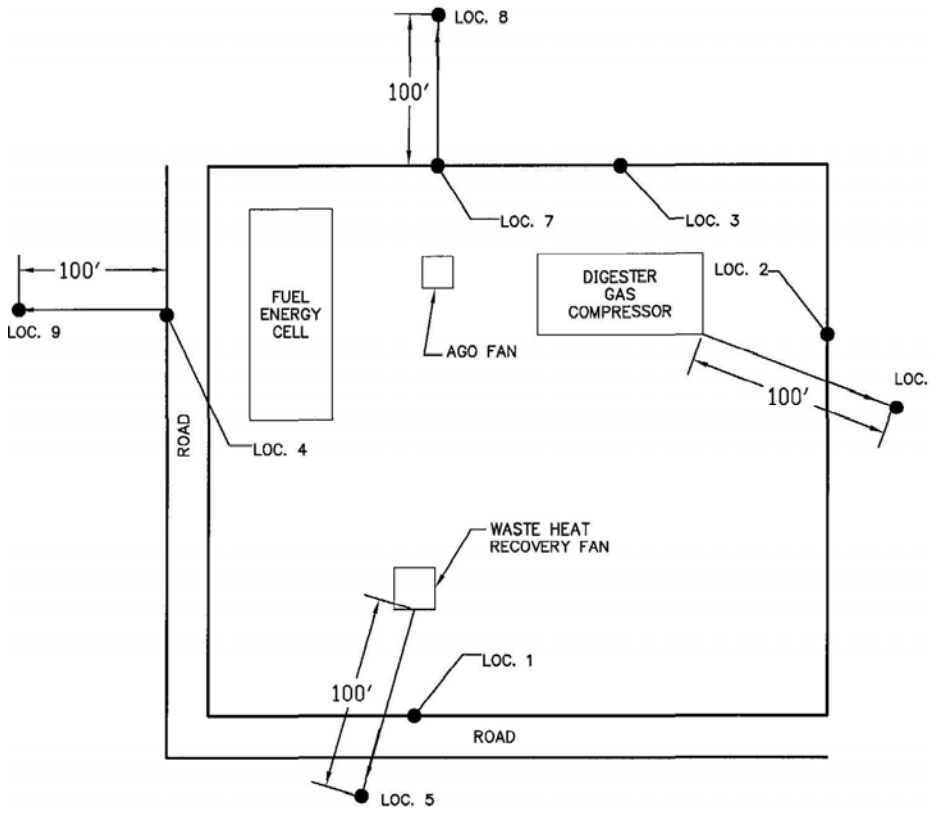

Digester Gas Compressor Cooling Water

Currently, the cooling water source for the digester gas compressor is reuse water or non-potable city water (C2) when the reuse water system is not operating. The water flow to the compressor is approximately 5 gallons per minute (gpm).

To save money, the water source was changed to disinfected secondary effluent (C3). C3 was used originally to cool the digester gas compressor, but significant biofouling in the compressor cooling coil required frequent compressor cleaning. Manual strainers were installed to mitigate the biofouling, but they had to be cleaned several times a day. The new C3 water will come from a location that has an automatic strainer. Strained C3 water is used in other compressors on the plant site, so it is not expected to cause a problem. No biofouling agent (e.g., sodium hypochlorite) will be added as it could corrode the cooling coil.

Inlet Gas Supply Switchover

FuelCell Energy designed, tested and implemented "fuel switch-over" logic for the King County fuel cell plant. If the fuel cell is operating on digester gas, this logic automatically switches the fuel cell to natural gas during a Binax divert event. While operating at full power, the logic initiates automatically on a Full divert signal from King County. The logic transitions the fuel cell from digester gas to natural gas in approximately 20 minutes, while operating at full power and with no reduction in power output. The switch-over is accomplished by adjusting the gas control valves and continuously monitoring the methane concentration of the digester gas. A four hour hold, in addition to a verification of the digester gas methane concentration (with the onboard gas analyzers) returning back to normal is required before operators are allowed to switch back to digester gas operations. All switches from natural gas to digester gas are manually initiated and require operator verifications prior to conducting. Operators can also manually initiate a switchover from digester gas to natural gas for maintenance, if required. This logic has eliminated trips of the fuel cell due to rapid methane spikes in the digester gas caused by divert events. The spikes are caused by scrubbed gas being diverted to the King County digester gas collection system and flowing into the fuel cell's digester gas suction line. A divert event can raise methane concentrations from ~60%-80% in a short period of time.

Carbonyl Sulfide Vessel

Construction and commissioning of the carbonyl sulfide (COS) removal system were completed. COS is a contaminant that occurs naturally in the local utility natural gas supply. The contaminant is removed with a granular media. To simplify operation, all natural gas (local utility or treatment plant) will pass through the COS vessel. Media life will be calculated by measuring the amount of utility natural gas used over time, and assuming the concentration of COS is the same as measured in the past.

Power Plant Components

This section describes the performance of the individual fuel cell power plant components.

Natural Gas Treatment System

The wastewater treatment plant gas scrubbing system had several divert events, forcing operation on natural gas.

Fuel Cell Stack

The fuel cell output is derated periodically over its life to maximize life of the stacks. The derating is scheduled to occur every six months. The derating is based on a linear derating of 10% over an assumed three-year life. The fuel cell derating schedule is shown below.

Start of operation:	100% rated = 1 MW or designed maximum output
6 months:	98% of beginning of life (BOL)
12 months:	96% of BOL
18 months:	94% of BOL
24 months:	92% of BOL
30 months:	90% of BOL

The first two percent derating (20kW) was completed on March 3, 2005. Since the stack was replaced in July 2005, the derating schedule will begin anew. A new derating schedule and power output will be determined after the new stack module is operational.

Waste Heat Recovery Unit

In January, the waste heat recovery unit was officially commissioned. It is designed to run when the fuel cell is generating power, not under hot standby conditions. When given the permissive signal from the fuel cell, the waste heat recovery system works as designed. When the permissive is taken away, the waste heat recovery blower shuts down.

The waste heat recovery system operated from May 9 until the June 15 shutdown, when condensation entered the digester gas compressor. During this time, an average of 1.3MM Btu/h of heat was recovered, raising the treatment plant heat loop temperature by an average of 16 degrees Fahrenheit.

Mechanical Balance of Plant (MBOP)

Systems performed as expected, with various components requiring some corrective maintenance. Please refer to the Maintenance Items section.

Electrical Balance of Plant (EBOP)

System performed well with no failures throughout the quarter.

Electrical and Thermal Efficiency

All efficiency calculations are based on a lower heating value (LHV) of 900 BTU/ft^3 for natural gas and 548 BTU/ft^3 for digester gas. The efficiency calculations are done at full load under standard conditions and include parasitic loads. Variations in ambient temperature and elevation do impact the fuel cell performance and efficiency.

Efficiency is measured in seven ways, as shown in Table 2. Defined as electrical efficiency, measurements 1 through 4 represent how much electricity is produced as a function of inlet gas supply; measurements 5 through 7 represent the thermal efficiency, which takes into account the electricity produced and the waste heat recovered. The efficiency values reported for the power plant include parasitic power demands, as well as the inversion from DC to AC.

Highly accurate efficiency calculations require the use of flow meters calibrated to greater accuracy than the fuel cell power plant has. Therefore, efficiency values will differ depending on the method used to obtain gas flow information and electrical output data. The efficiency calculations presented here have an estimated ± 2-3% variance.

Parasitic loads as a function of gas supply are shown below. The digester gas has an additional load for the gas compressor of about 40 kW at full power. The M10-4 unit is limited to 1,090 kW AC gross. Thus, minus the balance of plant loads and transformer /inverter losses for natural gas (~90 kW) = 1,000 kW.

Gas Type	Balance of Plant Loads (kW)	Transformer/ Inverter Losses (kW)	Total Parasitic Losses (kW)
Natural gas	48-53	~37	85-90
Digester gas	55-75 (including compressor)	~37	92-112

The efficiency is slightly higher for digester gas than natural gas, because the fuel cell runs at a slightly lower temperature and therefore less air is needed for cooling. All efficiency numbers reflect operation at full power, and include the total parasitic losses described above. Availability is the total time the fuel cell was able to operate when a gas supply was available. Graphical results from efficiency measurements 1 and 2 are shown in Appendix A. These measurements come from logging devices in the fuel cell power plant.

Table 2 - Efficiency Measurements

Efficiency Measurement	Components	Where Calculated on Flow Chart	Value Q2-05	How Calculated
1	Power plant operating on natural gas	C/A	43%	electricity out /natural gas in
2	Power plant operating on digester gas	C/B	44%	electricity out /digester gas in
3	Power plant operating on digester gas (with digester gas skid losses)	C/(B+F)	43-44%	electricity out/(digester gas in + compressor power in)
4	Fuel stack only	H/G	No data to date	fuel cell stack DC power out /gas to the fuel cell stack
5	With heat recovery on natural gas	(C+D)/A	60%	(electricity out + heat recovered)/natural gas in
6	With heat recovery on digester gas	(C +D)/B	61%	(electricity out + heat recovered)/digester gas in
7	With heat recovery on digester gas (with digester gas skid losses)	(C+D)/(B+F)	60%	(Electricity out +power used for skid + heat energy recovered)/Total fuel in

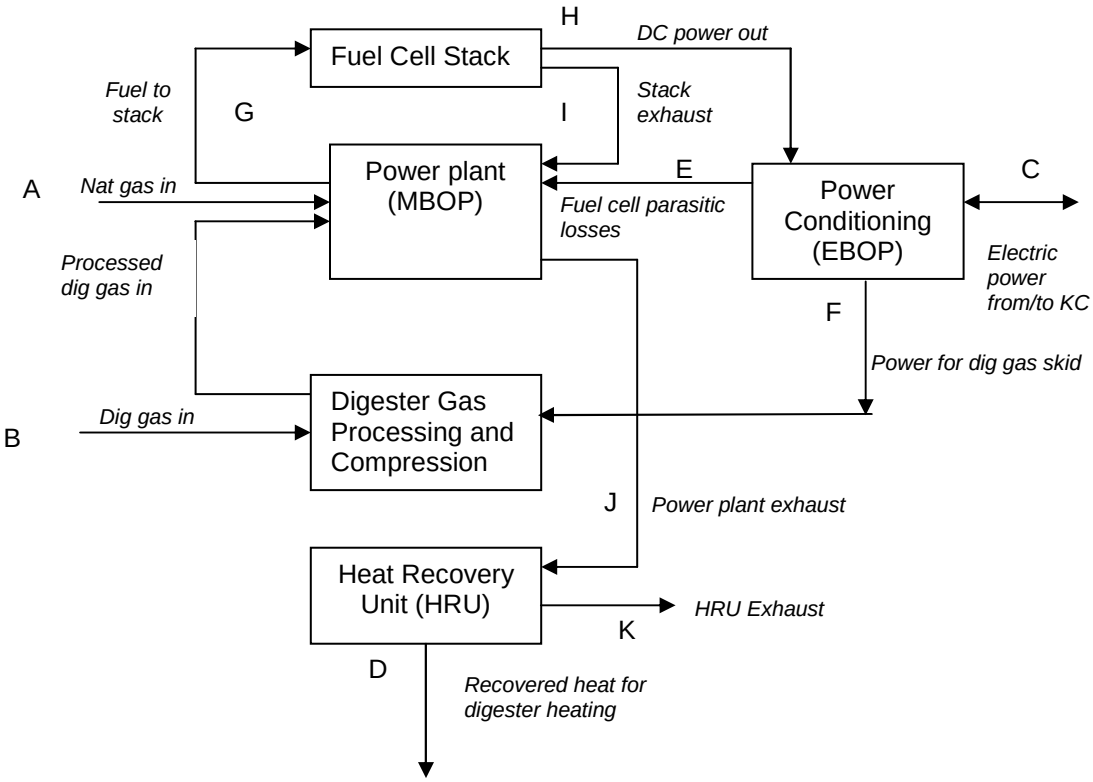

Cumulative Performance Summary

One measure of the fuel cell's performance is availability, or the percentage of time the fuel cell actually operates relative to the amount of time gas supply was available. Additional measures of the fuel cell's performance are summarized in Tables 3 and 4. Table 3 presents natural gas data and Table 4 digester gas data.

Table 3 - Fuel Cell Performance Summary on Natural Gas

Year	**2004**			**2005**				**2006**	
Parameter	**Q2**	**Q3**	**Q4**	**Q1**	**Q2**	**Q3**	**Q4**	**Q1**	**Q2**
Run time (hours)	356	1338	350	780	1115	0			
kWh generated	0.30M	1.1M	0.59M	0.70M	1.1M	0			
Availability	91%	93%	100%	100%	84%	76%			
Electrical Efficiency	43%	43%	43%	42%	43%	NA			

Table 4 - Fuel Cell Performance Summary on Digester Gas

Year	**2004**			**2005**				**2006**	
Parameter	**Q2**	**Q3**	**Q4**	**Q1**	**Q2**	**Q3**	**Q4**	**Q1**	**Q2**
Run time (hours)	0	126	182	1227	691	0			
kWh generated	0	79k	357k	1.16M	489k	0			
Availability	N/A	64%	95%	90%	94%	76%			
Electrical Efficiency	N/A	44%	44%	43%	44%	NA			

Performance Goals and Metrics

Seventeen performance goals and metrics were established by King County and FuelCell Energy. They are described in Table 5, with the results to date.

Table 5 – Performance Goals and Metrics

Performance Goal	Metric	Result through Q3 2005
1. Deliver high quality and quantity gas to the fuel cell	Acceptable gas supply >95% of the time. Digester gas Btu content between 550 and 610 Btu/standard cubic foot (scf) @ 4 to 7 inches water column; 50 to 100°F	One of three gas sources has been available 100% of the time
2. Produce energy as designed on natural gas and digester gas	Produce 15,000 MWhrs gross power for 2-year test period. Prorate to later half of test after plant normalized after first 6-9 months. 1 MW net. Parasitic electric loads for natural gas and digester gas to be measured during testing. Full power = 140 scfm natural gas and 230 on digester gas	Approx 2,000 MWhrs gross power generated during quarter 1. Prorated out to 2 years is 16,000 MWhrs. 1 MW net met on both natural gas and digester Full power on natural gas is 135 scfm and 230 scfm on digester gas.
3. Produce minimal noise and equipment interferences	60 decibels (dBA) at a distance of 100 feet from fuel cell pad (70 dBA at a distance of 10 feet)	Generally met goals when waste heat recovery system not operating. See noise measurement section.
4. Produce energy at a minimal cost	0.2 full time equivalents (FTEs) – Operations 0.2 FTEs – Maintenance 0.1 FTEs – Miscellaneous Cost of energy to produce 1 kWh of power < $0.10 (energy off the grid $0.05, but a premium is paid for green power)	More FTEs used during transition from FCE to KC operations and maintenance staff
5. Produce minimal air emissions – natural gas and digester gas	CO < 10 ppmV NOx < 2 ppmV NMHC < 1 ppmV	NG: All met in Q2 2004 DG: NOx and NMHC met in Q2 2005. CO goal exceeded (13ppm).
6. Produce wastewater/drain water with no adverse impacts to the treatment plant	Water treatment system brine Cooling water Condensate	Water tested had acceptable quality.

Performance Goal	Metric	Result through Q3 2005
7. Operate fuel cell on a continuous basis	Downtime for maintenance and troubleshooting limited to 20 hours/week (remain at hot standby condition) Availability of > 80% (for fuel cell only) Run 85% of the time at full net power for 2 years. Determine frequency of downtime and length of time out of service.	84% available on NG and 94% available on DG for Q2. Fuel cell not available for 28 days of Q3. Remainder of shutdown not associated with fuel cell.
8. Electrical Efficiency	45% efficiency on natural gas 45% efficiency on digester gas	Natural Gas: 43% Digester Gas: 44%
9. Manage system with ease remotely	Monitor and control system through SCADA at the operations building at FCE's office in Danbury, CT	Achieved
10. Effectively remove hydrogen sulfide from digester gas	Remove hydrogen sulfide to < 10 ppmV on inlet gas	Polisher exhaust < 10 ppmV
11. Reasonable costs to dispose of solid waste	SulfaTreat® system lasts for 0.6 years before replacement Carbon systems (both natural gas and digester gas systems) last for 0.5-1 years before replacement Fuel cell lasts for 3 years before replacement Preconverter catalyst lasts for 5 years before replacement Oxidizer catalyst lasts for 5 years before replacement Exhaust gas polisher lasts for 2-3 years before replacement Deoxidizer catalyst lasts for 5 years before replacement Fuel cell not negatively affected by digester gas Deactivated catalysts (from preconverter, oxidizer, deoxidizer and exhaust gas polisher) (recover precious metals)	SulfaTreat® media replaced at end of quarter after approx 8 months of use on digester gas. Disposed of on-site for landscaping. No cost for disposal.
12. Recover heat successfully	Recover 1.4MM Btu/hr of heat (13,800 lbs gas/hr @ 650°F out of stack)	Q2 2005: 1.3MM Btu/h
13. Output turndown	25% to 100%	Accomplished Q2 2004.
14. Output ramp rate	0.5 kW/min (cold start)	Accomplished Q2 2004 and w/every ramp up.
15. Design service life	10,000 hours (1.15 years)	Stack operated 7602h before replacement
16. Restart from a trip	Trip recovery to back on load in ~10h	Accomplished Q2 2004.
17. Start quickly	Hot start in 10h (standby to rated output)	Accomplished Q2 2004.

Operations and Maintenance

Operations and maintenance continues to transfer from FCE to King County. Lewis Canada is the lead King County operator for the fuel cell project. Lewis spends half of his time at the fuel cell; the other half will be spent at the turbine cogeneration facility once it begins operation in the fall of 2005.

Training

All training of King County staff has been completed.

Operations

The responsibility of filling in the daily operations checklists has been transferred from FCE to King County. The checklist can be performed on hardcopy or with a handheld personal digital assistant (PDA). The responsibility for first response to plant alarms now belongs to King County Operations.

Maintenance

The responsibility for performing preventive maintenance (PM) activities was transferred from FCE to King County in February of 2005. Ongoing corrective maintenance items include the following:

- Anaerobic Digester Gas Suction Knockout Drum level switch
- Divert Alarms: Numerous false alarms indicating that communications between KC instruments related to Divert signals and the fuel cell distributed control system (DCS) were generated from the "watchdog" timer.
- Continued issues with water being drawn into the ADG compressor from the KC LSG suction line

Publications

Publishing and presenting data about the fuel cell project has occurred regularly throughout the demonstration period. The papers and presentations given during the reporting period are described below.

Poster. *Sustainable On-Site Power Generation using a 1 MW Fuel Cell and Digester Gas,* , Jaimie Hennessy, Eleanor Allen, Greg Bush, Dave Hennessy, WEF Technology 2005, Second Joint Specialty Conference for Sustainable Management of Water Quality Systems for the 21st Century, San Francisco, California, August 2005.

Paper and Presentation. *Lessons Learned from the World's Largest Digester Gas Fuel Cell*, Eleanor Allen, Jaimie Hennessy, Greg Bush, Carol Nelson, Dave Hennessy, WEFTEC 2005, Washington, D.C., October 2005.

Presentation. *Fuel Cell Demonstration Project*, , Greg Bush, Pacific Northwest Clean Water Association, Tacoma, Washington, November, 2005.

Awards

The King County Fuel Cell Demonstration Project received the 2005 Research and Technology Award from the National Association of Clean Water Agencies. The award was announced at the association's annual conference in Washington, D.C., May 2005

APPENDIX A

Efficiency and Output Data

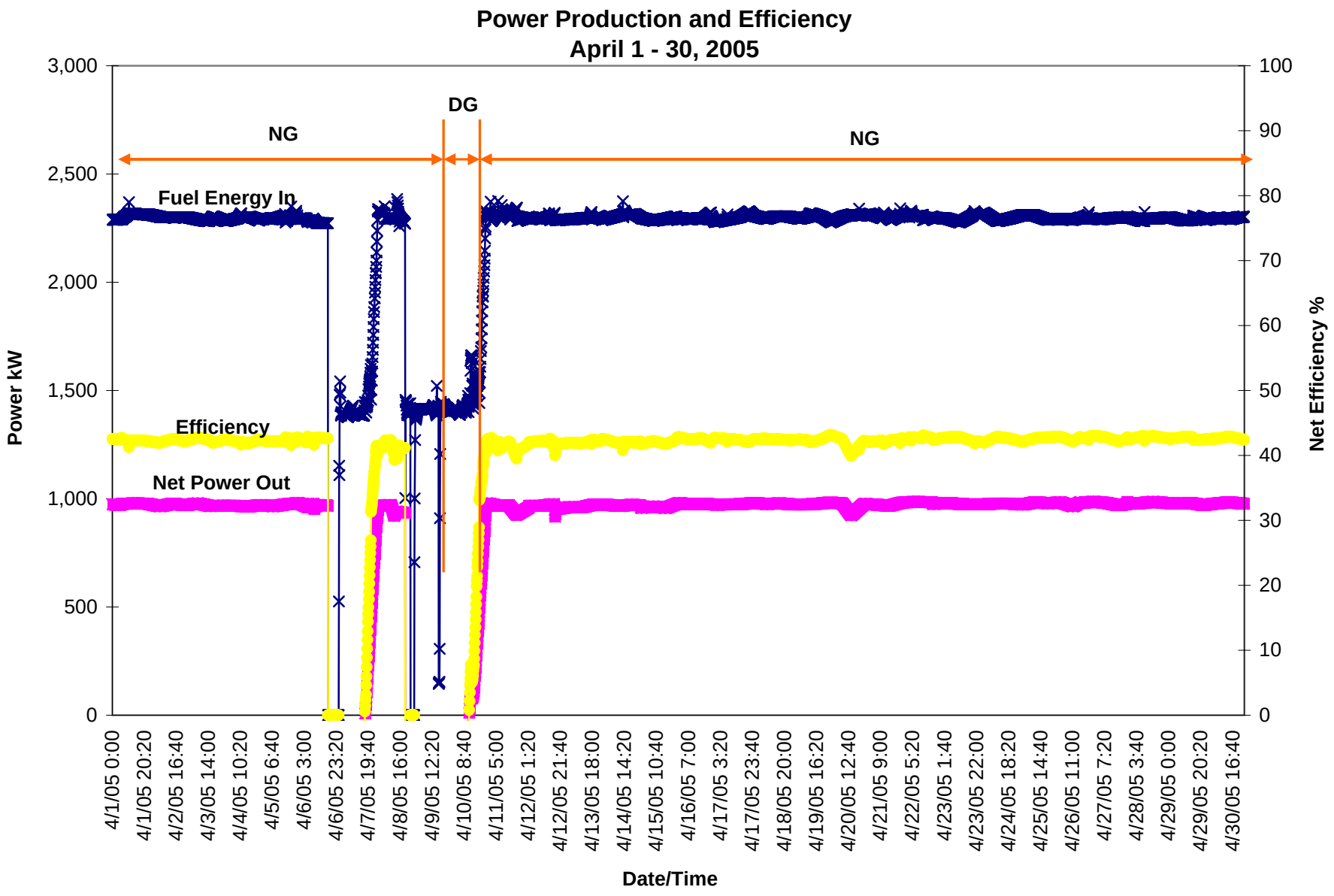
Power Production and Efficiency
April 1 - 30, 2005
NG
DG
NG
Fuel Energy In
Efficiency
Net Power Out
Power kW
Net Efficiency %
Date/Time
3,000
2,500
2,000
1,500
1,000
500
0
100
90
80
70
60
50
40
30
20
10
0
4/1/05 0:00
4/1/05 20:20
4/2/05 16:40
4/3/05 14:00
4/4/05 10:20
4/5/05 6:40
4/6/05 3:00
4/6/05 23:20
4/7/05 19:40
4/8/05 16:00
4/9/05 12:20
4/10/05 8:40
4/11/05 5:00
4/12/05 1:20
4/12/05 21:40
4/13/05 18:00
4/14/05 14:20
4/15/05 10:40
4/16/05 7:00
4/17/05 3:20
4/17/05 23:40
4/18/05 20:00
4/19/05 16:20
4/20/05 12:40
4/21/05 9:00
4/22/05 5:20
4/23/05 1:40
4/23/05 22:00
4/24/05 18:20
4/25/05 14:40
4/26/05 11:00
4/27/05 7:20
4/28/05 3:40
4/29/05 0:00
4/29/05 20:20
4/30/05 16:40

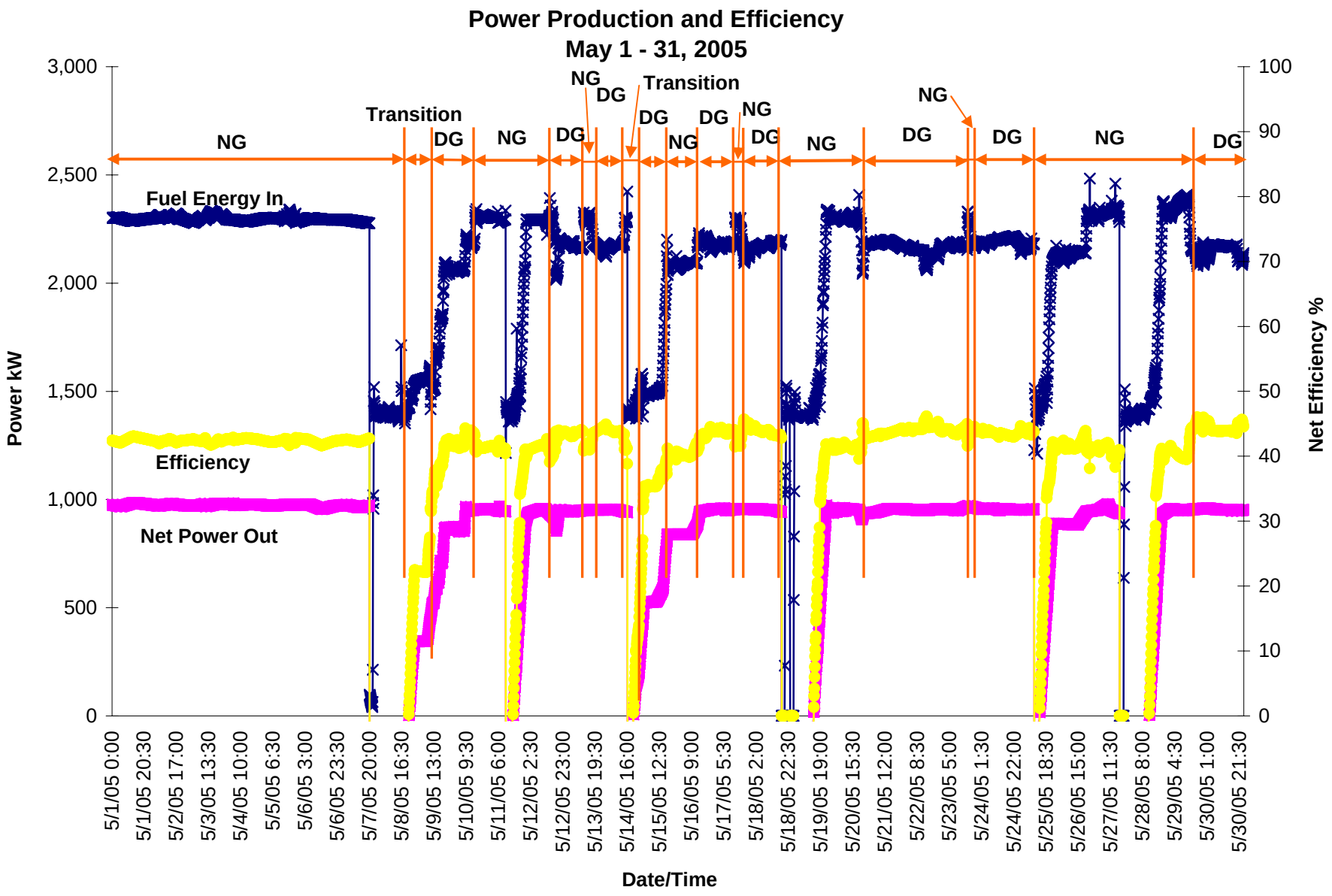
Power Production and Efficiency
May 1 - 31, 2005
Power kW
Net Efficiency %
Date/Time
Fuel Energy In
Efficiency
Net Power Out
NG
DG
Transition
3,000
2,500
2,000
1,500
1,000
500
0
100
90
80
70
60
50
40
30
20
10
0
5/1/05 0:00
5/1/05 20:30
5/2/05 17:00
5/3/05 13:30
5/4/05 10:00
5/5/05 6:30
5/6/05 3:00
5/6/05 23:30
5/7/05 20:00
5/8/05 16:30
5/9/05 13:00
5/10/05 9:30
5/11/05 6:00
5/12/05 2:30
5/12/05 23:00
5/13/05 19:30
5/14/05 16:00
5/15/05 12:30
5/16/05 9:00
5/17/05 5:30
5/18/05 2:00
5/18/05 22:30
5/19/05 19:00
5/20/05 15:30
5/21/05 12:00
5/22/05 8:30
5/23/05 5:00
5/24/05 1:30
5/24/05 22:00
5/25/05 18:30
5/26/05 15:00
5/27/05 11:30
5/28/05 8:00
5/29/05 4:30
5/30/05 1:00
5/30/05 21:30

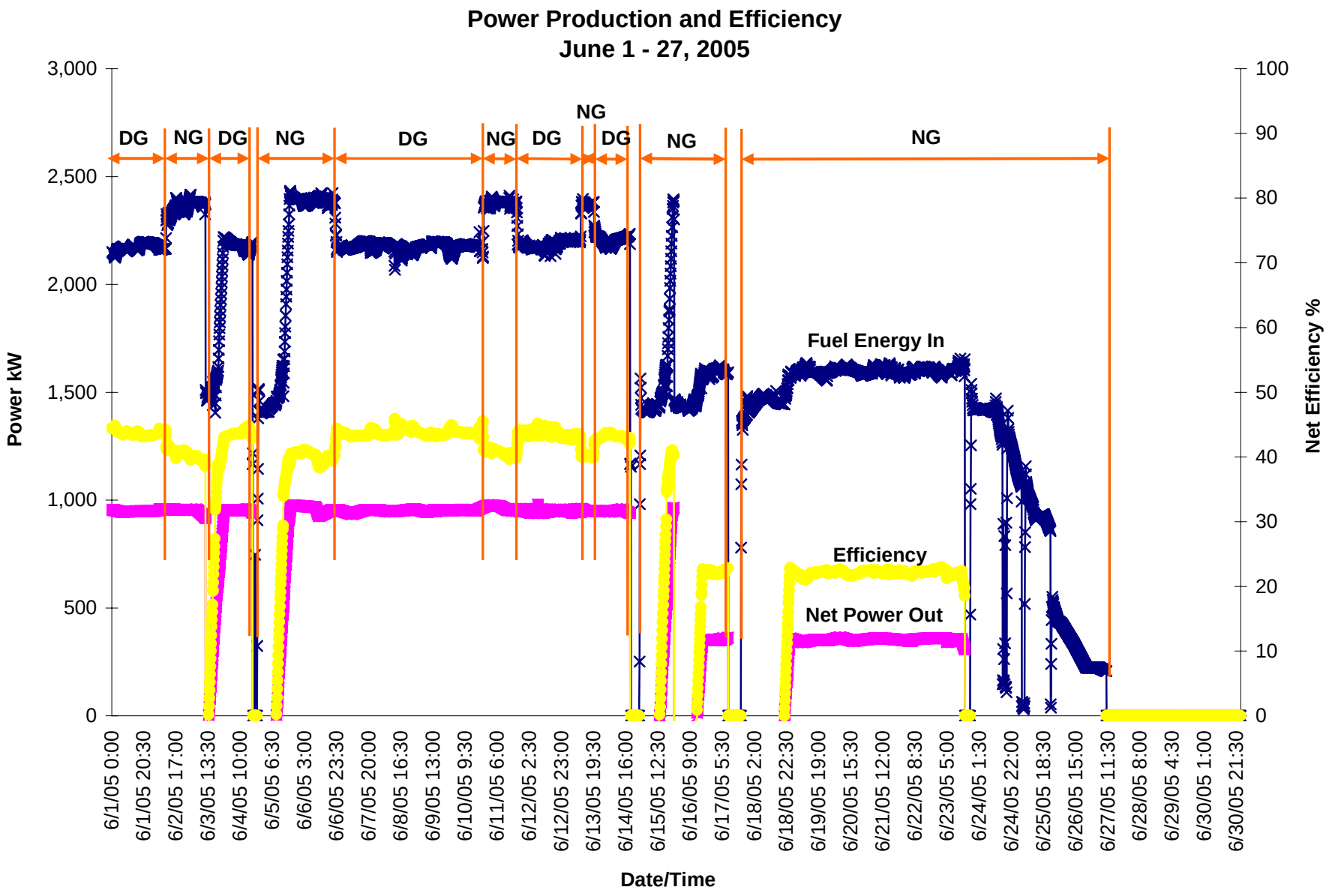
Power Production and Efficiency
June 1 - 27, 2005
DG
NG
DG
NG
DG
NG
DG
NG
DG
NG
NG
Fuel Energy In
Efficiency
Net Power Out
Power kW
Net Efficiency %
Date/Time
3,000
2,500
2,000
1,500
1,000
500
0
100
90
80
70
60
50
40
30
20
10
0
6/1/05 0:00
6/1/05 20:30
6/2/05 17:00
6/3/05 13:30
6/4/05 10:00
6/5/05 6:30
6/6/05 3:00
6/6/05 23:30
6/7/05 20:00
6/8/05 16:30
6/9/05 13:00
6/10/05 9:30
6/11/05 6:00
6/12/05 2:30
6/12/05 23:00
6/13/05 19:30
6/14/05 16:00
6/15/05 12:30
6/16/05 9:00
6/17/05 5:30
6/18/05 2:00
6/18/05 22:30
6/19/05 19:00
6/20/05 15:30
6/21/05 12:00
6/22/05 8:30
6/23/05 5:00
6/24/05 1:30
6/24/05 22:00
6/25/05 18:30
6/26/05 15:00
6/27/05 11:30
6/28/05 8:00
6/29/05 4:30
6/30/05 1:00
6/30/05 21:30

APPENDIX B

Source Evaluation Report

Project No. 2402

SOURCE EVALUATION REPORT

King County South Treatment Plant
Renton, Washington

Molten Carbonate Fuel Cell Demonstration Project

Fuel Cell Exhaust: CO, NO_x, SO_2, VOC, & HAPs

Digester Gas: Hydrogen Halides & Siloxanes

June 8, 2005

Prepared for
CH2M HILL
1100 112th Avenue NE
Suite 400
Bellevue, WA 98004-4504

REVISED January 12, 2006

TABLE OF CONTENTS

	Page Number
1. CERTIFICATION	**4**
2. INTRODUCTION	**5**
3. SUMMARY OF RESULTS	**7**
4. SOURCE DESCRIPTION AND OPERATION	**11**
5. SAMPLING AND ANALYTICAL PROCEDURES	**15**
6. DISCUSSION	**21**

APPENDIX	**Page Number**
Nomenclature & Drift Correction Documentation	22
Fuel Cell Exhaust Gases	
Gaseous Emissions Determination	24
Sample Calculations	26
Molecular Weight Determinations	27
Analyzer Calibration Data and Bias Checks	28
Data Logger Gas Charts	31
Gas Chromatographs & Laboratory Record	33
Method 3C Gas Composition Laboratory Report	48
Fuel Cell Exhaust Flow Rate	
Flow Rate Determinations	51
Sample Calculations	52
Field Data	54
Traverse Point Locations	55
HAPs	
Emissions Determination	56
Field Data	57
Laboratory Report	58

APPENDIX (Continued) **Page Number**

Digester Gas Siloxanes & Composition Analysis
Siloxanes Emissions 70
Air Toxics Laboratory Report (Siloxanes) 72
Stoichiometric Gas Analysis Calculations 81
PGT Laboratory Report (Digester Gas) 82
Ambient Temperature Data 84
Digester Gas Hydrogen Halides
Chloride and Total Hydrogen Halides Results 85
Field Data 86
Columbia Analytical Services Laboratory Report 87
Process Information 99
Production/Process Data 109
Calibration Information
Meter and Standard Meter 110
Pitots 115
Shortridge Micromanometer 116
Thermocouples and Indicators 119
Barometer 121
Calibration Gas Certificates 122
QA/QC Documentation
Procedures 136
NO_x Analyzer Converter Efficiency Data 139
Analyzer Interference Response Data 140
Correspondence
Source Test Plan 158

1. CERTIFICATIONS

1.1 Test Team Leader

I hereby certify that the test detailed in this report, to the best of my knowledge, was accomplished in conformance with applicable rules and good practices. The results submitted herein are accurate and true to the best of my knowledge.

Name: Thomas A. Rhodes, E.I.T.

Signature _____ Date _____

1.2 Report Review

I hereby certify that I have reviewed this report and find it to be true and accurate, and in conformance with applicable rules and good practices, to the best of my knowledge.

Name: David Bagwell

Signature _____ Date _____

1.3 Report Review

I hereby certify that I have reviewed this report and find it to be true and accurate, and in conformance with applicable rules and good practices, to the best of my knowledge.

Name: Michael E. Wallace, P.E.

Signature _____ Date _____

2. INTRODUCTION

2.1 Client: CH2M HILL

2.2 Physical Location: King County South Treatment Plant
1200 Monster Road SW
Renton, Washington 98055

2.3 Mailing Address: CH2M HILL
1100 112th Avenue NE, Suite 400
Bellevue, WA 98004

2.4 Test Log:

Fuel Cell Exhaust: CO, NO_x, SO_2, VOC, HAPs (TO-14)

Test Date	Run No.	Test Time
June 8, 2005	Preliminary	09:30 – 10:32
"	1	11:02 - 12:02
"	2	12:33 – 13:33
"	3	14:00 – 15:00

Summary: Four valid runs were completed. The waste heat recovery fan was turned off at 10:26 (at the end of the preliminary run) and remained off for the rest of the testing.

Digester Gas (Fuel Cell Inlet): Siloxanes and Gas Composition

Test Date	Run No.	Test Time
June 8, 2005	1	09:35 – 11:35
"	2	11:50 – 13:50
"	3	14:05 – 16:05

Summary: Three valid runs were completed. Tedlar Bag sample collected at approximately 16:10 for ASTM D3588 heat content and composition.

Digester Gas (Fuel Cell Inlet): Hydrogen Halides

Test Date	**Run No.**	**Test Time**
June 8, 2005	1	11:48 – 12:48
"	2	13:09 – 14:22
"	4	15:50 – 16:50

Summary: Three valid runs were completed (Runs 1, 2, and 4). Run 3 was invalid because of sampling equipment problems.

2.5 Test Purpose: Pilot plant study

2.6 Background Information: None

2.7 Participants:

Horizon Personnel:

Thomas A. Rhodes, E.I.T., Team Leader and Calculations
Paul Heffernan, Field Technician
Michael E. Wallace, P.E., Calculations and QA/QC
David Bagwell and David R. Rossman, P.E., Report Review
Kate Krisor, Technical Writer

Test Arranged by: Stacia G. Dugan and Eleanor Allen, CH2M HILL

Observers:

Plant Personnel: Lewis Canada, King County
Consultants: Stacia G. Dugan and Eleanor Allen, CH2M HILL
Agency Personnel: None

Test Plan Sent to: Fred Austin, Puget Sound Clean Air Agency (PSCAA)

3. SUMMARY OF RESULTS -- 3.1 Table(s) of Results:

Table 1

Fuel Cell Exhaust - CO, NO_x, SO_2, VOC Test Results

Test Date: June 8, 2005	**Units**	**Prelim.** [1]	**Run 1**	**Run 2**	**Run 3**	**Average**
Start Time		09:30	11:02	12:33	14:00	
End Time		10:32	12:02	13:33	15:00	
Sampling Results						
CO	ppmv	14	14	13	13	13
Rate	lb/hr	0.18	0.17	0.17	0.16	0.17
NO_x, Actual [2]	ppmv	0.2	0.3	0.2	0.2	0.2
Rate	lb/hr	0.0038	0.0053	0.0047	0.0034	0.0045
NO_x, at MDL level	ppmv	<0.6	<0.6	<0.6	<0.6	<0.6
Rate	lb/hr	<0.012	<0.012	<0.013	<0.013	<0.013
SO_2, Actual	ppmv	0.4	0.2	0.2	0.1	0.2
Rate	lb/hr	0.011	0.0064	0.0070	0.0039	0.0058
SO_2, at MDL level	ppmv	<0.6	<0.6	<0.6	<0.6	<0.6
Rate	lb/hr	<0.017	<0.017	<0.018	<0.017	<0.017
VOC as TGOC Conc.	ppmv-C	294	325	333	327	328
Methane	ppmv-C	--[3]	291	288	281	287
Rate	lb/hr	--	1.5	1.6	1.5	1.5
TGNMOC [4]	ppmv-C	--	35	45	46	42
Rate	lb-C/hr	--	0.19	0.25	0.25	0.23
HAPs (TO-14) [5]	None of the TO-14 compounds were detected.					
O_2	%	11.5	11.1	11.1	11.1	11.1
CO_2	%	7.9	8.3	8.6	8.1	8.3
Source Parameters						
Flow Rate (Actual)	acf/min	7,310	7,600	7,790	7,550	7,650
Flow Rate (Standard)	dscf/min	2,860	2,880	2,950	2,900	2,910
Temperature	°F	625	649	651	635	645
Stoichimetric Moisture [6]	%	20.7	21.4	21.4	21.4	21.4
Process/Prod. Data						
Percentage of full load	%	--	--	--	--	100

Revised January 12, 2006

[1] Preliminary run made when waste heat recovery was on. It was off for remaining runs.
[2] NO_x and SO_2 results were below the method detection limit (MDL) of 2% of the analyzer span, or 0.6 ppm. Results were calculated using actual and MDL values.
[3] Methane bag not collected for preliminary run.
[4] TGNMOC=total gaseous non-methane organic compounds
[5] None of the TO-14 compounds were detected. The methylene chloride on the report was not from the sample but was a laboratory contaminant. All of the other TO-14 compounds were below the laboratory method detection limits (MDL) of 0.5 to 1 ppbv and practical quantitation limits (PQL) of 1 to 10 ppbv.
[6] Calculated using gas composition analysis, measured O_2 at the outlet, steam/carbon ratio 2:1 of fuel mixture, and EPA Method 19 stoichiometric equations.

Table 2

Digester Gas Siloxanes and Hydrogen Halides Test Results

Test Date: June 8, 2005	**Units**	**Run 1**	**Run 2**	**Run 3**	**Run 4**	**Average**
Sampling Results						
Total Siloxanes [7]						
Rate	lb/hr	<0.0064	<0.0077	<0.0077	--	<0.0072
Total Hydrogen Halides[9]						
Concentration	ppmv	<0.311	<0.422	--[10]	<0.424	<0.386
Rate	lb/hr	<0.00040	<0.00055	--	<0.00055	<0.00050
Chloride						
Concentration	ppmv	0.036	<0.042	--	<0.042	<0.040
Rate	lb/hr	0.000045	<0.000055	--	<0.000055	<0.000052
Fluoride						
Concentration	ppmv	<0.116	<0.161	--	<0.162	<0.146
Rate	lb/hr	<0.000079	<0.00011	--	<0.00011	<0.00010
Heat Content and Composition (One Tedlar Bag)						
Nitrogen	mole %	--	--	--	--	0.53
Carbon Dioxide	mole %	--	--	--	--	11.44
Methane	mole %	--	--	--	--	21.27
Ethane	mole %	--	--	--	--	0.097
Gas Heating Value	Btu/ft^3	--	--	--	--	217
Process/Prod. Data						
Digester gas flow	dscf/min	226	231	227	--	228

Revised January 12, 2006

3.2 Description of Collected Samples:

TO-14: 6 liter Summa canisters

Siloxanes: Vials containing sample and methanol reagent

Method 26 Hydrogen Halides: Midget impinger contents (sample and reagent was 0.1 N sulfuric acid)

Digester Gas: 5 liter Tedlar bag

[7] Two-hour runs. Siloxanes were all below the laboratory reporting limit. The value of the reporting limit for all five siloxane compounds analyzed was used to calculate results and a total rate is in this table.

[9] Results below the method reporting limit (MRL) are reported as "<" (less than) and the value of the MRL was used to calculate results.

[10] Run 3 sampling train was not set up correctly.

3.3 Discussion of Errors and Quality Assurance Procedures: This table is taken from a paper entitled "Significance of Errors in Stack Sampling Measurements", by R.T. Shigahara, W.F. Todd and W.S. Smith. It summarizes the maximum error expressed in percent, which may be introduced into the test procedures by equipment or instrument limitations.

Measurement	% Max Error
Stack Temperature Ts	1.4
Meter Temperature Tm	1.0
Stack Gauge Pressure Ps	0.42
Meter Gauge Pressure Pm	0.42
Atmospheric Pressure Patm	0.21
Dry Molecular Weight Md	0.42
Moisture Content Bws (Absolute)	1.1
Differential Pressure Head ΔP	10.0
Orifice Pressure Differential ΔH	5.0
Pitot Tube Coefficient Cp	2.4
Orifice Meter Coefficient Km	1.5
Diameter of Probe Nozzle Dn	0.80

3.3.1 Manual Methods: QA procedures outlined in the test methods were followed, including equipment specifications and operation, calibrations, sample recovery and handling, calculations and performance tolerances.

On-site quality control procedures include pre- and post-test leak checks on trains and pitot systems. If pre-test checks indicate problems, the system is fixed and rechecked before starting testing. If post-test leak checks are not acceptable, the test run is voided and the run is repeated. The results of the quantifiable QA checks for the test runs are on the Field Data sheets. Horizon does semi-annual calibrations on pitots, thermocouples, and nozzles.

Pitots are examined before and after each use to confirm that they are still aligned. Pitot systems are leak-checked before traverses begin, and after runs are completed (before any component disassembly). The results were within allowable tolerances. Prior to use, thermocouple systems are checked for ambient temperature before heaters are started or readings are taken. Problems with connections or polarity are obvious from these and readings as temperatures rise. Thermocouples are relatively permanent and rarely go out of calibration.

3.3.2 Continuous Analyzer Gas Sampling: Analyzer system checks performed are noted on the Calibration Field Record sheet, with procedures documented in the QA/QC section in the Appendix. All calibration standards used in the testing were EPA Protocol 1. Certificates for the gases are in the Appendix.

3.3.3 EPA Methods 18 & 26 (HCl) Testing: Horizon Engineering requested audit sample(s) from PSCAA to comply with paragraph 7.2 of Method 18 and paragraph 7.3 of Method 26. However, audit samples were not provided prior to testing.

3.3.4 EPA Methods 6C & 7E Testing: Horizon Engineering was unable to use ambient level analyzers to quantify emissions from the Fuel Cell exhaust. Instead the source level analyzers were set on the lowest setting for which Horizon had calibration gases, in both cases the range was 0 to 30 ppm.

3.3.5 EPA Method 18 Gas Chromatograph: QA procedures from EPA Method 18 include the following:

- The analyzer was purged with zero air and room air between the runs.
- EPA Protocol 1 or calibration gas traceable to NIST standards were used to calibrate the GC.

4. SOURCE DESCRIPTION AND OPERATION

4.1 Process and Control Device Description and Operation:

In cooperation with the U.S. Environmental Protection Agency and Fuel Cell Energy Inc., King County is sponsoring the demonstration project of a Molten Carbonate Fuel Cell (MCFC) using anaerobic digester gas. The MCFC is sized to produce 1 MW of power. During testing the plant was running at full load.

Waste heat from the plant is integrated with the existing heat recovery system, although the waste heat recovery fan was turned off near the end of the preliminary run and kept off for the remaining runs.

CH2MHill has written a complete description of the fuel cell as part of their work on this project and a copy of this description is in the Appendix.

4.2 Test Ports: Ports and traverse points are described and diagrammed on the Field Data sheets.

4.2.1 Inlet Gas Sample Port Characteristics: The inlet port was identified by Fuel Cell Energy Inc. personnel who were on site during testing. The port was a ¼ inch pipe with a Swagelock valve.

4.2.2 Exhaust Duct Characteristics:

Construction: Steel
Shape: Rectangular
Size: 30.875 inches x 30.875 inches
Orientation: Vertical
Flow straighteners: None
Extension: None
Cyclonic Flow: None expected
Meets EPA M-1 Criteria: No, does not meet the criteria of two diameters downstream from a flow disturbance.

4.3 Process & Control Equipment Flow Diagram: See CH2M HILL process description in the Appendix

4.4 Operating Parameters: The complete set of data is in the Production/Process Data section of the Appendix. The following list summarizes that data set:

- Anaerobic digester gas usage–240 cfm continuous flow
- Percentage of full load—100%
- Average methane in raw digester gas during test–60.5%.

4.5 Process Startups/Shutdowns or Other Operational Changes During Tests: Process was continuous during testing.

4.6 On-Site Photographs:

Figure 1

Digester Gas Inlet to Fuel Cell

Sampling Location and Equipment

Figure 2

Fuel Cell Exhaust Sampling Location and Equipment

5. SAMPLING AND ANALYTICAL PROCEDURES

5.1 Sampling Procedures:

5.1.1 Sampling and Analytical Methods: Testing was conducted in accordance with EPA Methods in Title 40 Code of Federal Regulations Part 60 (40 CFR 60), Appendix A, July 1, 2002; and Oregon Department of Environmental Quality (ODEQ) methods in Source Sampling Manual Volume 1, January 1992.

Source: Fuel Cell Exhaust

Flow rate:	EPA Methods 1 & 2 (pitot traverses)
CO_2 & O_2:	EPA Method 3A (NDIR and paramagnetic analyzers)
Moisture:	Stoichiometric equations using gas composition results and measured exhaust O_2 concentration
SO_2:	EPA Method 6C (ultraviolet analyzer)
NO_x:	EPA Method 7E (chemiluminescent analyzer)
CO:	EPA Method 10 (gas filter correlation analyzer)
VOC:	EPA Method 25A (heated sample line and analyzer)
Methane:	EPA Method 18 Modified (Tedlar bags & GC-FID analysis)
HAPs:	EPA Method TO-14 (Summa Canisters)

Source: Raw Digester Gas

Heat Content & Composition: ASTM D3588; one Tedlar bag grab sample. Sulfur content not analyzed.

Siloxanes: GC-MS on sampling train contents (vials filled with methanol provided by Air Toxics); three 2-hour runs

Hydrogen Halides: EPA Method 26; three 1-hour runs

5.1.2 Fuel Cell Exhaust Sampling Equipment: The continuous gas sample was collected from one of the exhaust ports with a 3/8 inch diameter stainless steel probe. The probe tip was placed in the center of the duct, and secured with baling wire hung from the exhaust exit. Test ports not in use were kept covered. Gas sample was routed via heated line to the analyzers in the test van. The Summa canister and Tedlar bag samples were extracted from a tee placed on the sample line prior to the analyzers. The testers used a manlift to reach the ports on the well-insulated duct. Figure 2 is a photograph of this sampling location.

5.1.3 Raw Digester Gas (Inlet) Sampling Equipment: The testers attached sample line to the inlet port Swagelock valve. The line was immediately divided for separate setups for siloxanes and hydrogen halides. The siloxane testing equipment consisted of an orifice, vials (with impinger tops installed) supplied by Air Toxics, and a rotameter. The hydrogen halides sampling line included a valve to control flow to the Method 26A midget impinger train. A rotameter after the train was used to verify the flow rate.

5.1.4 Sampling Notes:

TO-14 Sampling: After Run 1 was complete the testers discovered that the Summa canister flow controller had not been working during Run 1 (the vacuum in the canister remained at 25.9 Hg, just as it was received from the lab). The testers did not use the flow controller for the remaining runs; instead they collected one grab sample during Runs 2 and 3.

None of the TO-14 compounds were detected by the laboratory except methylene chloride. Sucha Parmar of AA&C confirmed that the methylene chloride was a laboratory contaminant. He stated that the results show evidence of this in the fact that the highest concentration of methylene chloride was for Run 1. Because this can was not filled with sample gas the lab used more helium than for Runs 2 and 3. The helium filling is the likeiest route for contamination.

Method 26 Hydrogen Halides: Run 3 was invalid because it was inadvertently run with no reagent (0.1 N H_2SO_4) in the impingers. A fourth run was completed.

Siloxanes: The siloxane samples were received at the laboratory at room temperature rather than 4ºC ± 2 ºC. However, the samples were received two days after analysis, well within the five-day period that samples will remain stable, as determined in the laboratory's internal QA procedures.

Digester Gas Analysis: Sulfur analysis was planned for the Tedlar bag sample but was accidentally left off the chain of custody. By the time this was discovered the original and duplicate bags were empty, so no analysis was possible.

5.1.4 Laboratory Analysis:

Analyte	**Laboratory**
TO-14 & Gas Analysis	Atmospheric Analysis & Consulting, Inc.
Siloxanes	Air Toxics Ltd.
Hydrogen Halides	Columbia Analytical Services, Kelso, Washington
Digester Gas Analysis	Pacific Gas Technology, Inc.

5.2 Sampling Train Diagrams:

Figure 3
EPA Methods 3A, 6C, 7E, & 10 Analyzer Sample System Diagram

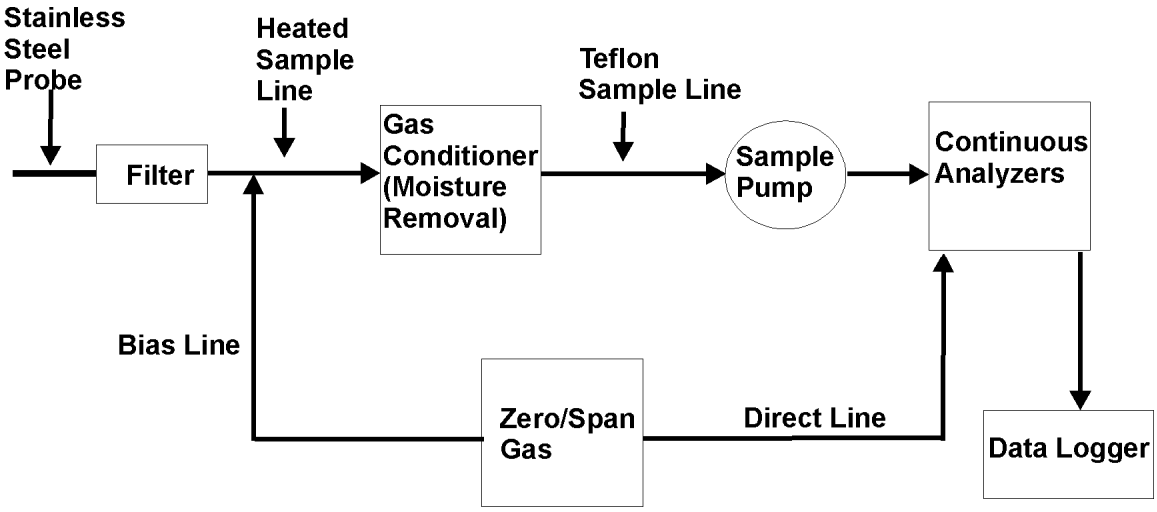

Figure 4
EPA Method 25A VOC Analyzer Sample System Diagram

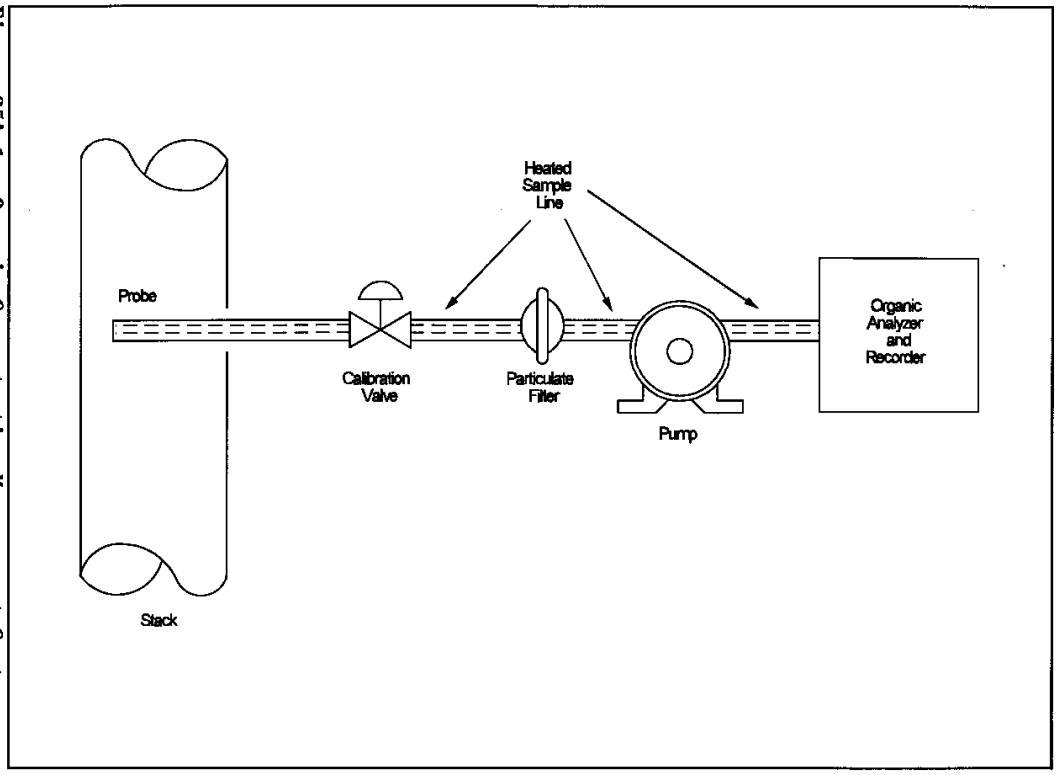

Figure 25A-1. Organic Concentration Measurement System.

1262

Figure 5
EPA Method 26 HCl Sample Train Diagram

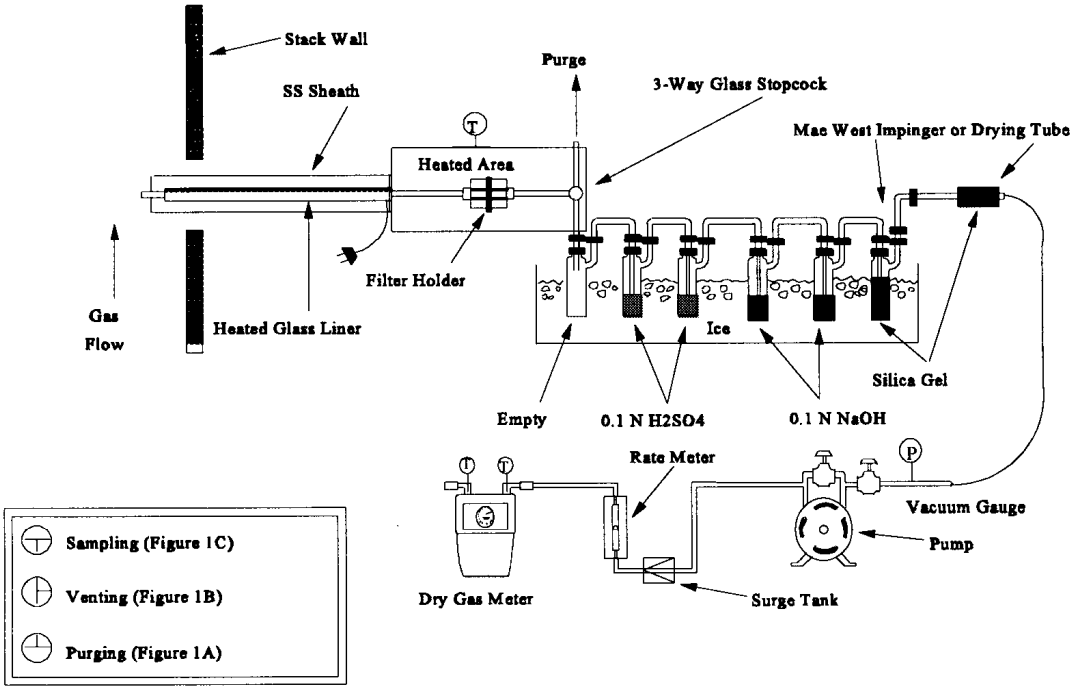

Figure 26-1. Sampling train.

Diagram Exceptions: NaOH impingers not used. Test was for halides only.

5.3 Horizon Test Equipment:

5.3.1 Manual Methods:

Equipment Name	Identification
Freestanding Meter	H
Pitots and Thermocouples	5S-1
Shortridge® Micromanometer	SR-1
Barometer	Test Van III

5.3.2 Continuous Emissions Monitors and Methods:

Gas	Brand	Model	Range	Measurement Method	Method
O_2	Servomex	1400	0-25%	Paramagnetic	3A
CO_2	Servomex	1400	0-25%	Chopperless NDIR	3A
CO	Thermo Env	48	0-500 ppm	Gas Filter Correlation	10
TGOC	J.U.M.	VE-7	0-100 ppm C_3H_8	Flame Ionization	25A
NO_x	Thermo Env	42C	0-30 ppm	Chemiluminescent	7E
SO_2	West. Resch	921NMP	0-30 ppm	Non Disp. Ultra-violet	6C

5.3.3 Continuous Emissions Monitors Sampling Setup:

CO_2, O_2, CO, NO_x, SO_2 Sampling:

Probe:	Stainless
Conditioning:	Thermoelectrically cooled conditioner
Sample Line(s):	Teflon, heated line to the conditioner
Pump:	Teflon lined
Data Logger:	Keithley (PC based) with Test Point software

TGOC Sampling:

Probe:	Stainless steel
Conditioning:	none
Sample Line(s):	Teflon heated line
Pump:	heated, internal to analyzer
Data Logger:	Keithley (PC based) with Test Point software

5.3.4 Summa Canister Setup: (TO-14)

Probe:	New Teflon
Sample Line:	New Teflon
Filling Method:	Controllers provided by Atmospheric Analysis & Consulting (were not used after Run 1). Grab sample

5.3.5 Bag Sampling Setup: (Gas Composition, and Methane)

Probe:	New Teflon
Sample Line:	New Teflon
Bag:	5 liter Tedlar bags
Filling Method:	Positive pressure of digester gas stream

5.3.6 Siloxane Vials:

Probe:	New Teflon
Sample Line:	New Teflon
Sampling Method:	Positive pressure of digester gas stream
Sample Volume:	Rotameter set at 0.15 liters per minute

5.3.7 Gas Chromatograph Sampling Setup:

GC:	Hewlett-Packard 5890 Series II Plus
Software:	Chemstation

6. DISCUSSION

The results of the testing should be valid in all respects. All quality assurance checks including leak checks, instrument checks, and calibrations, were within method-allowable tolerances.

APPENDIX C

Noise Measurement Report

Memorandum

DATE: June 14, 2005

TO: *Eleanor Allen, CH2M HILL, 425.468.3100*

FROM: *Elizabeth Bogomolov*

RE: ***South Treatment Plant*** *–Fuel Cell Noise Measurements*

Transmitted by: ☐ Mail ☐ Delivery ☒ Fax ☒ E-mail

This memo presents the results of measurements of sound levels at the Fuel Cell at South Treatment Plant in Renton, Washington. These measurements were taken on June 14, 2005 between 9:00 AM and 11:00 AM. The temperature was 58° F with humidity at 67% during the measurements. Winds were out of the NNW with speeds from 6 to 7 mph.

The measurements were conducted using the following equipment:

Larson Davis 2900 sound level analyzer.	SN A0386
Larson Davis 900B Preamp	SN 2603
Larson Davis 2560 Microphone	SN 2123
Larson Davis CA 250 Acoustic Calibrator	SN 1193

The meter meets the requirements for a Type I instrument, as delineated in American National Standards Institute Specifications (ANSI) S1.4-1983. All measurements were field calibrated immediately before and verified after the measurements. All equipment was recently laboratory calibrated.

The measurements were taken in the vicinity of fuel cell and digesters at a distance of 10 feet and 100 feet from the noise sources. Locations of the measurements are presented on the enclosed sketch, schematically.

Two series of measurements were taken:

1. Waste Heat Recovery Fan on.
2. Waste Heat Recovery Fan off.

NOMENCLATURE

- DECIBEL, dB.

The most common measure of sound level is expressed in decibels. The auditory response to sound is a complex process, which occurs over a wide range of

1900 W. Nickerson Street, Suite 201 · Seattle, WA 98119 · Phone (206) 378-0569 · Fax (206) 378-0641
www.greenbusch.com

frequencies and intensities. Decibel levels, or "dB", are a form of shorthand that compresses this broad range of intensities into a convenient numerical scale.

The decibel scale is logarithmic, and as such, a doubling or halving of energy causes the sound level to change by 3 dB; it does not double or halve the sound level as might be expected. The minimum sound level variation perceptible to a human observer is generally around 3 dB. A 5-dB change is clearly perceptible, and an 8 to 10 dB change is associated with a perceived doubling or halving of loudness.

- A-WEIGHTED DECIBEL, dBA

The human ear has a unique response to sound pressure. It is less sensitive to those sounds falling outside the speech frequency range. Sound level meters and monitors utilize a filtering system to approximate human perception of sound. Measurements made utilizing this filtering system are referred to as "A weighted" and are called "dBA".

The following table presents the measured sound pressure levels in A-weighted decibel, dBA.

Table 1: Measured Sound Pressure Levels, dBA

Location	***Distance to Noise Source***	***Measurement Condition***		***Dominant Source Fan on***	***Dominant Source Fan off***
		Fan on	Fan off		
1	10 feet	76.5 dBA	61.5 dBA	Waste Heat Recovery Fan	All source no waste heat rec. fan
2	10 feet	73.5 dBA	70.8 dBA	Digester Gas Compressor	Digester Gas Compressor
3	10 feet	74.5 dBA	69.9 dBA	Digester Gas Compressor	Digester Gas Compressor
4	10 feet	63.5 dBA	60.6 dBA	Fuel Energy Cell	Fuel Energy Cell
5	100 feet	62.5 dBA	57.8 dBA	Waste Heat Recovery Fan	All sources, no waste heat rec. fan
6	100 feet	66.4 dBA	59.6 dBA	Digester Gas Compressor	Digester Gas Compressor
7	10 feet	76.9 dBA	74.4 dBA	AGO Fan	AGO Fan
8	100 feet	60.5 dBA	60.4 dBA	AGO Fan, Digester Gas Compressor	AGO Fan, Digester Gas Compressor
9	100 feet	60.9 dBA	58.5 dBA	Fuel Energy Cell	Fuel Energy Cell

Source: The Greenbusch Group

Jul 15 05 08:40p Greenbusch Group (206) 378-0641 p.2

Please feel free to contact us if you have any questions.

1900 W. Nickerson Street, Suite 201 · Seattle, WA 98119 · Phone (206) 378-0569 · Fax (206) 378-0641
www.greenbusch.com

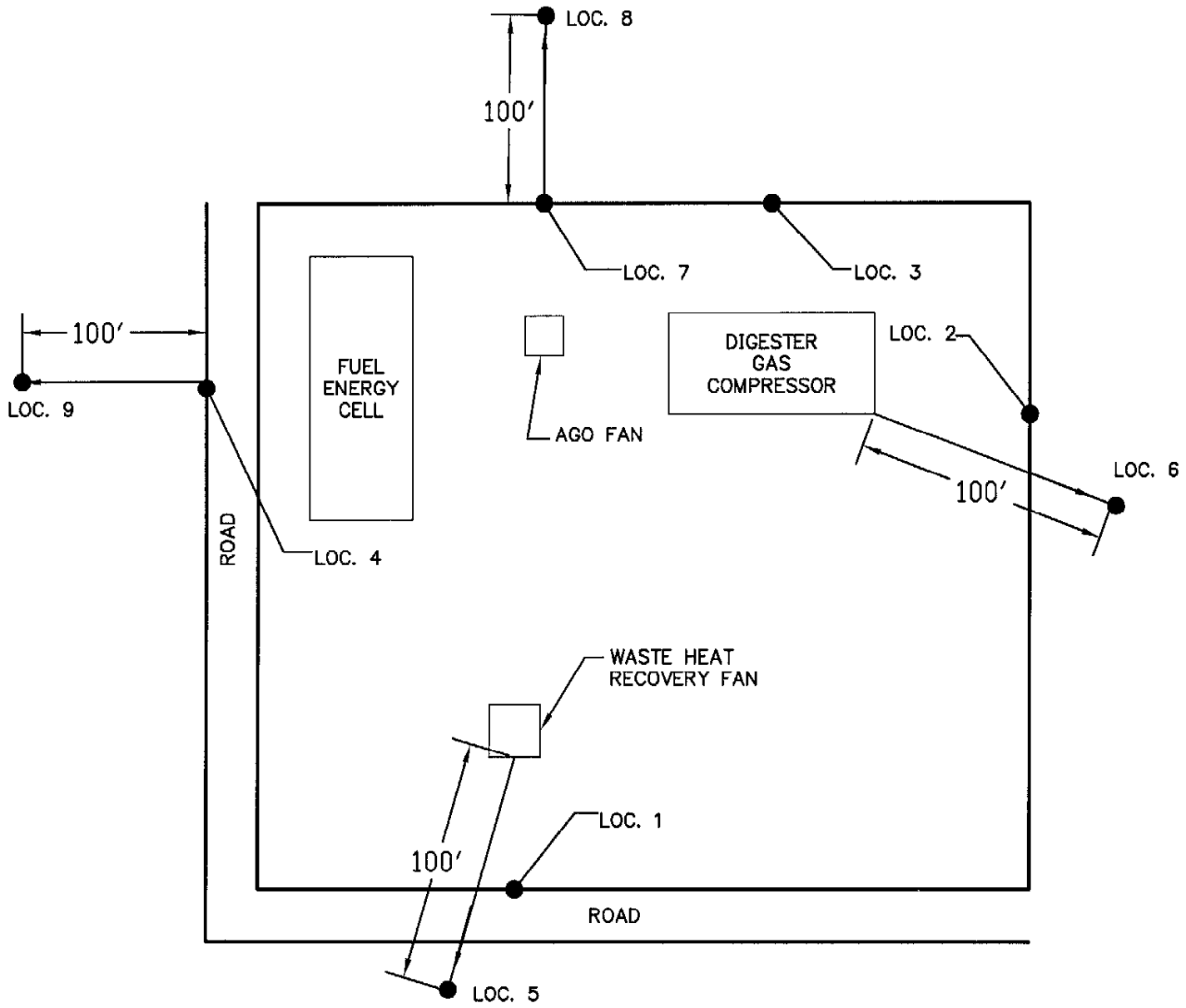

THE GREENBUSCH GROUP, INC.

ACOUSTICAL, AUDIO / VIDEO & MECHANICAL ENGINEERING
1900 WEST NICKERSON STREET SUITE 201 SEATTLE, WA 98119
(206) 378-0589 (206) 378-0641 FAX

NOISE MEASUREMENT LOCATION MAP

SOUTH PLANT FUEL CELL

RENTON, WASHINGTON

JOB #:	2005-144
REF DWG:	NONE
DATE:	6.15.05
SCALE:	NONE
TITLE:	MEASUREMENTS
SKETCH #:	SK-1