Appendix B

Final Draft Standards, Guidelines, Procedures, and Policies

Description:

This appendix contains the set of draft design standards, guidelines, procedures, and policies developed jointly by the County and local agencies for use in long-term I/I control.

Attachment A to this appendix are the *Final Issues and Findings for Standards, Procedures and Policies for I/I Reduction Projects*, based on the Local Agency Workshop #10, held Tuesday, October 11, 2005.

MWPAAC Engineering & Planning Subcommittee

FINAL DRAFT

Regional I/I Control Standards, Procedures, Policies and Intergovernmental Agreement (IGA)

October 19, 2004

MWPAAC Engineering & Planning Subcommittee

FINAL DRAFT

Table of Contents & Introduction

MWPAAC Engineering & Planning Subcommittee

Regional I/I Control Standards, Procedures, Policies and Intergovernmental Agreement (IGA)

Table of Contents

Beginning on Page:

A-1……**Introduction**

B-1……**Engineering Standards, Guidelines & Procedures:**
Introduction to Standards
(including Chart of Revised Standards)
B-7..……..Individual Engineering Design Standards and Guidelines

B-58……..Standard Detail Drawings

C-1……....**Policies:** Introduction to Policies
C-5……Individual I/I Control Policies

D-1……**Intergovernmental Agreement (IGA):** Introduction to IGA
D-3……Sample Intergovernmental Agreement

Appendices

Appendix A: Proposed and Adopted Revisions to Engineering Standards, Guidelines & Procedures

Appendix B: Proposed and Adopted Revisions to Policies that Support Standards & Procedures

Appendix C: Guide Specifications

Appendix D: Sample Public Information Material from Pilot Projects (see Policies 2 & 3)

Regional Infiltration/Inflow Control
Standards, Guidelines, Procedures & Policies

Introduction

Background

In 1999, the King County Council approved the Regional Wastewater Services Plan (RWSP). This is a region-wide plan, supported by Local Agencies that established several key components, including: constructing new wastewater treatment facilities, completing collection system improvements, addressing combined sewer systems, considering water reuse, and addressing **infiltration and inflow (I/I).** Specifically, the RWSP ordinance guided the County to work *cooperatively with component agencies to reduce the amount of I/I that flows into component agencies' local collection systems, thereby reducing the impact of I/I on the regional system's capacity.*

Addressing and reducing I/I effectively and efficiently is a complex task. I/I originates from a variety of sources including storm flow into manholes and pipes, groundwater that enters pipes through cracks, root intrusions and from private property. With few exceptions, property owners are prohibited from allowing groundwater and/or rainwater from entering the public sanitary sewer system. Direct connections of a property's roof and/or foundation drains to the public sewer system are called *illicit connections*. These do exist and they are known to cause problems. These problems can range from surcharged sewer lines, backflow of sewerage onto private properties, environmental and public health concerns and increased costs to convey and treat peak flows of sewage plus storm water.

The amount of infiltration and inflow depends on the condition of the all the elements that constitute the sanitary sewer system. Elements such as the number of illicit connections, the physical condition of main lines and privately owned side sewers, the level of groundwater and the porosity of the soil affect the amount of I/I.

Reduction and control of I/I entering the public sanitary sewer system can be managed by proper design, appropriate choice of material, proper installation of sewer infrastructure (including connections and manholes), careful supervision during construction and consistent preventative maintenance.

Historic data from several sources around the country and from King County indicate that under peak wastewater flow conditions, as much as 75% of the area's wastewater flow is generated from I/I. As depicted below, recent surveys[1] indicate that 50% to 70% of I/I comes from private property sources.

[1] King County Infiltration & Inflow National Survey + Pages 11-13, Control of Infiltration and Inflow in Private Building Sewer Connection, Dillard, Wayne, Chair, the Sanitary Sewer Overflow Cooperative Agreement Workgroup of the Water Environment Federation, 1999.

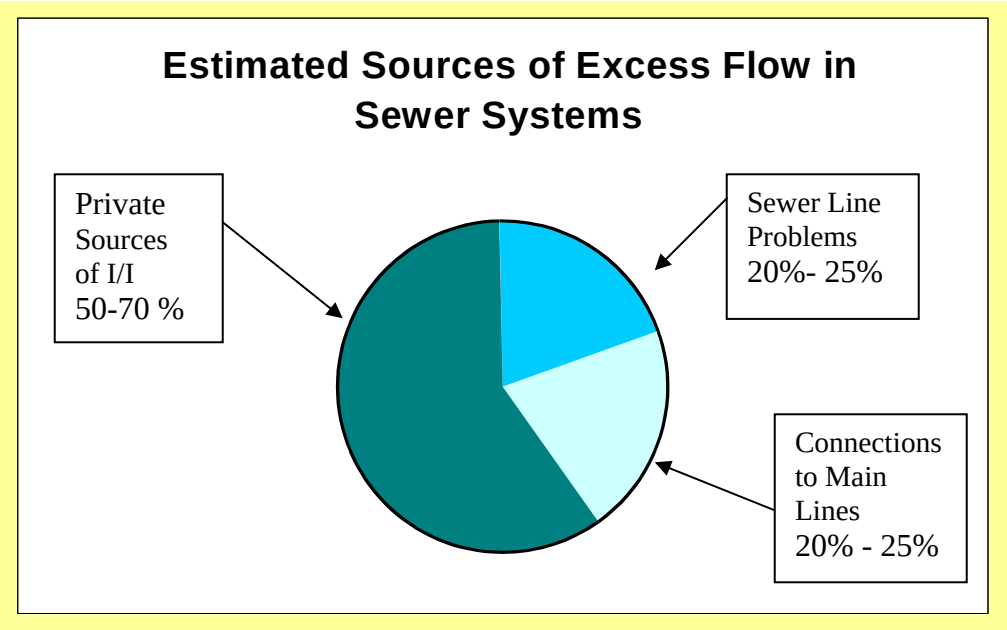

An I/I problem eventually comes to the attention of the general public because of one or more of these conditions: sewer overflows, private sewer facility backups, equipment failures, permit violations, higher operating costs, public facility expansions and/or higher utility rates. Significant problems with I/I often occur in older areas where sewer systems were built using old standards and procedures or have deteriorated. Newer sewer systems also experience problems with excessive I/I because of faulty connections, improper pipe bedding or various construction deficiencies.
As stated, the RWSP gave direction to investigate, quantify, and devise a plan to address I/I concerns. From this an I/I Control Program was begun in 2000 that included technical, financial, and policy considerations.

Purpose

Thirty-four politically and administratively independent Local Agencies discharge wastewater from their systems to King County's regional wastewater system. Wastewater flows within this vast service area have increased to the point that, in some cases, system capacity has been exceeded.
As part of I/I reduction efforts, the RWSP directed the County, in coordination with component agencies, to *develop model local conveyance systems' design standards, including inspection and enforcement standards, for use by component agencies to reduce I/I within their systems*. To meet target levels of I/I in the future, the RWSP also directed the County Executive to propose long-term measures that *include establishing new local conveyance systems design standards, implementing an enforcement program, developing an incentive based cost sharing program and establishing a surcharge program*.

This document contains proposals for Engineering Standards/Procedures, Guidelines and Standard Design Details designed to provide technical and policy tools to begin correcting the shortcomings in design, construction, inspection and testing of sanitary sewers – elements that can be responsible for infiltration and inflow. These Standards and Guidelines address only the features of the public and private sewer system associated with I/I. The document also contains proposed Policies that support these Standards and proposed Intergovernmental Agreement (IGA) clauses specifically tailored to the management of I/I reduction projects in this region. The final draft Standards, Procedures and Policies presented here are intended to augment and emphasize existing standards/procedures/policies previously developed by King County and Local Agencies. They will

be included in the Regional I/I Control Program Alternatives/Options Report and ultimately as part of the Executive's Plan.

Collaborative Approach

A series of workshops attended by representatives of King County, Local Agencies and the consultant team have been held to review and formulate each part of the Regional I/I Control Program. It was agreed at I/I Control Program Workshop #6 that the process of developing I/I Control Program standards and contract language would be a consensus-based, iterative dialogue between King County and the Local Agencies. In mid 2001, with input from King County and Local Agencies, the Earth Tech consultant team began the process by drafting alternative standards, procedures, policies and intergovernmental agreement (IGA) clauses. In the fall of 2001, Local Agencies provided input on preliminary concepts presented therein. At Workshop #7, in January 2002, it was agreed that a subcommittee of the Municipal Water Pollution Abatement Advisory Committee (MWPAAC) be formed to guide development of the Standards, Procedures and Policies.

This MWPAAC RWSP Subcommittee, now known as the Engineering and Planning Subcommittee (E&P), met twice a month during the spring and summer of 2002, and their draft recommendations were published in October 2002. These draft Standards, Procedures and Policies were then used in pilot projects conducted in accordance with the RWSP statement: *This cooperative process will assess levels of I/I in local conveyance systems and construct pilot projects to demonstrate the cost-effectiveness and environmental costs and benefits of local collection system rehabilitation.* The pilot projects also facilitated testing of various technologies for I/I control. The Local Agencies had selected the ten basins, based on consensus criteria, in which the County conducted the pilot projects.

After the pilot projects had been completed, the Earth Tech consultant team evaluated the lessons learned and drafted revised Standards, Procedures, and Policies, which the E&P Subcommittee reviewed and finalized during two meetings in 2004 (see Appendices A & B). In this Final Draft Regional I/I Control Standards, Procedures, and Policies document, the E&P Subcommittee recommends that the proposed Standards, Guidelines, Procedures, Policies and IGA be used during the design and construction of I/I reduction projects.

Document Contents

The second chapter of this document explains the purpose of the Standards and Procedures and presents each Standard and Procedure with information about its potential impacts. The Standards and Procedures focus on methods of design, construction, inspection and testing for use in new construction and rehabilitation projects. Included in the second chapter is an introduction to the engineering Guide Specifications, which are included in full in Appendix C.

The third chapter explains the purpose of the Policies that support the Standards and Procedures and presents each Policy with information about its potential impacts. The Policies provide guidance on issues, including funding, public education, access to private property, inspection, liability and storm water, that are associated with the application of the Standards and Procedures.

The fourth chapter explains the purpose of the IGA and presents a model IGA that can be adapted to a variety of I/I control situations.

This document has been reviewed by Local Agencies, MWPAAC members and King County I/I Control Program staff. It is provided as a final draft document for inclusion as part of the Alternatives/Options report and for further consideration in the Executive I/I Reduction and Control Plan.

Overview of How Standards, Procedures and Policies Fit into I/I Reduction Projects

The chart on the next page illustrates the role played by each individual Standard, Procedure, and Policy element in identifying an I/I problem and its cause, developing a detailed design and scope of work, construction, contracting, warranty, inspection/verification, and long term evaluation.

How Standards, Policies & IGA Elements Fit into an I/I Reduction Project

PLAN

ESTABLISH THAT THERE IS AN I/I PROBLEM

- Standards:
  - PS 1 Storm drainage connections to the sanitary sewer
  - PS 2 Design Capacity for Pipeline Rehabilitation Projects
  - PRV 2 Allowable connections to Side Sewers (new construction)
- Guidelines:
  - PS 3-7 Sanitary Sewer System Evaluation Program
- Policy 2 King County to provide educational material re Regional Program

IDENTIFY CAUSE OF PROBLEM

- Standard:
  - PS 2 Design Capacity for Pipeline Rehabilitation Projects: Failures (Visual, Other)
- Guidelines:
  - PS 3–6 Sanitary Sewer System Evaluation Program
  - PS 7 Modeling & Engineering Analysis

DEVELOP PRELIMINARY SCOPE OF WORK and PRIORITIZATION

- Policy 1 Public Funding Available for All Elements of I/I Control
- Criteria to prioritize in Capital Facilities Plan or I/I Control Plan (Benefit/Cost or Pricing Incentive, GMA Regulations, Comp Plans)
- Standard Process for Scoping
- Policy 3 Specific Project Community Education & Involvement
- Policy 6 Rehabilitation Planning & Oversight – Liability

DESIGN

DETAILED DESIGN & SCOPE OF WORK

- Standards:
  - PUB 1, 3-6, Manhole Specifications
  - PUB 7, Sewer System Design
  - PUB 8, Abandonment Requirements
  - PUB 10-14 Manhole Rehabilitation & Spot Repairs
  - PRV 7, 8 Spot Repairs & Root Intrusion
- Guidelines:
  - PUB 9, Pipe Rehabilitation Methods
  - PRV 1, 3, 4 Pipe bedding & pipe materials
  - PRV 6 Lateral/Side Sewer Rehabilitation

Policy 8-10 On-site Storm Drainage Management

Policy 4 Obtain legal access to private property

Policy 11 Establish property restoration agreement

Policies 12 Establish minimum qualifications for contractors in bid specification

Policy 13 Obtain all permits

Intergovernmental Agreement (IGA) Conditions

CONSTRUCT

CONSTRUCTION

- Standards:
  - PRV 5 Inspection Wyes/Cleanouts
  - Policy 3 Respond to individual's concern

WARRANTY & VERIFICATION

- Standards:
  - PUB 15-19 Leak Testing, Pipe Installation & Inspection
  - PRV 9-14 Leak Testing, Inspection & Certification Requirements
  - PRV 12 Product Specific Inspection
  - PRV 13 Product Specific Certification
- Guidelines:
  - PUB 20 Certification, Warranty & Qualifications
  - PRV 10 Sanitary Side Sewer Inspection
- Policy 4 Enforce codes
- Policy 7 Ensure privately funded & public systems continue to function after rehabilitation. Post Rehabilitation – Warranty, Bonding & Retainage

LONG TERM EVALUATION

Policy 15: Revisions of Standards & Guidelines

PS = Planning
PUB = Public
PRV = Private

MWPAAC Engineering & Planning Subcommittee

FINAL DRAFT

Design and Engineering Standards

Regional I/I Control Program

Standards, Procedures & Policies for I/I Reduction Projects
Final Draft Introduction to Engineering Standards

Purpose and Background

Based upon discussions with King County staff, the Local Agencies and regional I/I programs across the nation, it has been determined that factors contributing to I/I in the local and regional wastewater systems include improper construction practices and materials; lack of adequate inspection and testing prior to acceptance of a new and rehabilitated sections of sewer; improper system maintenance; and inadequate enforcement of existing ordinances.

This section presents standards, guidelines and procedures for future King County and Local Agency sewer system planning and design that have been developed to focus on correcting shortcomings in design, construction, inspection and testing that have been responsible for I/I. The standards, guidelines and procedures address only those features of sewer systems associated with I/I. They are intended to augment and emphasize standards published by the individual Local Agencies that outline design requirements for overall sewer system design, construction and rehabilitation.

Contributing I/I Factors

Infiltration and inflow are extraneous flows in separated sanitary sewer systems. Infiltration is groundwater that enters buried sewers and service connections by way of defective sewer main elements such as leaky connections of pipes to manholes, broken or separated pipe joints, root intrusion, cracked or crushed pipe, leaky rehabilitation improvements and leaking sewer lines that are abandoned but still connected to the system *(see diagram):*

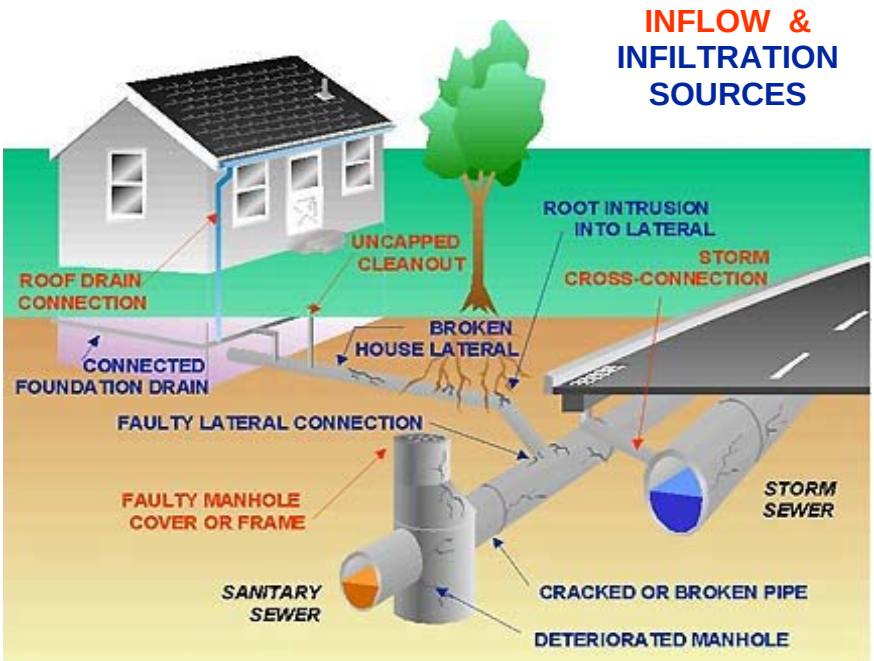

Inflow is surface water that enters the sanitary sewer system by direct connections from roof drains, area drains, catch-basins and unimproved surface drainage. Groundwater sources connected to the system including footing drains and sump pumps, and surface water entering the system through manhole covers are also sources of inflow *(see diagram).*

The following are key factors contributing to impairment of sewer systems' structural abilities, resulting in infiltration and/or inflow:

- Sewer mains, laterals and side sewers that are not properly supported are subject to vertical displacements over time, causing joints to open and pipeline trenches to settle, producing cracks or breaks in sections of the pipe.
- Manholes constructed in wet ground become recipients of groundwater if the exterior walls are not adequately sealed to make joints and connections watertight.
- Structural failure of sewer pipes allows groundwater to enter the system at the point of connection to manholes. Deep cuts and poor ground conditions often result in a larger than necessary excavation, leading to unequal settlement if uniform support is not provided for the pipe and manhole. Inadequate support often causes failure of the pipe in shear at the manhole and provides a point of entry for groundwater.
- Materials must be appropriate for the ground conditions present. Pipeline failures often occur due to the misuse of materials.
- Wyes and tees not properly plugged with a manufacturer's watertight plug, snugly fit and firmly secured, until services are installed and connected can be a source of I/I. Improperly connected service lines, unplugged wyes and tees, and broken plugs allow groundwater infiltration.
- Root systems of plants and trees seeking underground water supplies for nourishment will grow into a sewer through deteriorated and non-gasketed joints or other openings. Groundwater will follow the path of the roots into the sewer. Root intrusion also impedes the normal flow in the pipe, and can eventually stop the flow entirely.
- Manholes that are subject to inundation or located in the path of surface water flow can contribute significant quantities of runoff to the sanitary sewer system.

Recognizing past situations that have allowed extraneous flows to enter the system and establishing standards to prevent these deficiencies on future projects can greatly reduce future I/I. Equally important is ensuring that the standards are followed during construction. Even when adequate standards are in place and used for sewer system design, a lack of inspection and testing during construction allows deficiencies in the system that let extraneous flows enter the system. The standards, guidelines and procedures in this section address testing and inspection requirements for sewer system construction as well as requirements for sewer system planning and design.

Development of Standards, Guidelines and Procedures

The process of developing the Standards, Guidelines and Procedures was a collaborative effort among King County, the Local Agencies and the Earth Tech Consultant Team that spanned several years, as described in the Introduction to this report.

The E&P Subcommittee developed the initial draft standards and policies while considering cost, experience and feasibility factors. In discussing the level of control that should be included in the standards, the group determined that the approach to requiring new and/or different engineering techniques, procedures and policies would be most successful if introduced to the Region's Local Agencies in relatively small, incremental steps. The Subcommittee made this decision based upon financial and political realities. For this reason, the group often opted for the specific alternative of each Standard that required the least risk or financial impact. The group agreed that some alternatives should be considered voluntary Guidelines instead of mandatory Standards. A working draft set of Standards, Guidelines, Procedures and Policies,

dated October 21, 2002 resulted from this effort. A summary of the original and rewritten standards is included in Appendix A.

The E&P Subcommittee decided to apply the working draft Standards, Guidelines, Procedures and Policies to the pilot projects, in order to test their effectiveness and the impacts on staff time and the Local Agency's resources. Following completion of the pilot project construction, the Standards, Procedures and Policies were revisited by the Earth Tech Team to review their effectiveness, incorporate the lessons learned during the project design and construction, and make recommendations for any proposed changes to the documents. The proposed changes were presented and reviewed with the E&P Subcommittee, and a final draft set of Regional I/I Control Standards and Procedures was established. A summary of the proposed changes to the working draft and the Subcommittee's recommendations and accepted changes is included in Appendix A. The Final Draft Standards and Procedures appear below.

Organization of Standards and Guidelines

The standards and guidelines are divided into the following three major categories:

- Planning Standards and Guidelines (PS)– The planning standards and guidelines provide criteria to be followed during the planning phase of sewer projects and I/I investigations.
- Public Facilities (PUB)– The public facility standards and guidelines provide requirements for sanitary sewer systems that will be owned, operated and maintained by King County or a Local Agency. These systems include sewers to be constructed within public rights-of-way and developer extensions constructed within easements that eventually will be transferred to a Local Agency. Categories here include design and construction standards, testing standards, inspection standards and warranty requirements.
- Private Facilities (PRV)– The public facility standards and guidelines provide requirements for privately owned sanitary sewers. It addresses the segments of sanitary side sewers and laterals belonging to the property owners being served. Categories here include design and construction standards, testing standards, inspection standards and warranty requirements.

Separate standards and procedures are provided for new construction and rehabilitation projects. New construction includes the addition of sanitary sewer infrastructure in areas that do not currently have sewer service, as well as the replacement of existing systems. Rehabilitation projects include improvements to existing sanitary sewer systems, including collection mains, manholes and side sewers. Rehabilitation techniques such as cured-in-place liners, pipe bursting, slip-lining and manhole liners fall into this category.

Outline of Individual Standards and Procedures

Each standard or procedure in this document is listed on a separate sheet. While some standards originally offered several alternatives to provide a variety of levels of I/I control with considerations for impact to the Local Agencies, the E&P Subcommittee has narrowed these alternatives to one recommendation per standard, shown in this section. Each standard consists of the following:

- ***I/I Control Standard Title*** – A brief name of the Standard.
- ***I/I Control Measure Description*** – A description of why the Standard is being proposed; essentially what I/I source is being targeted.

- ***Standard/Guideline*** – This describes the Standard/Guideline in sufficient detail for engineers and Local Agency representatives to compare the intent with existing standards.
- ***Potential Local Agency Impacts*** – This indicates the potential impacts on Local Agencies adopting the standard. Impacts may include additional staffing requirements and impacts on Local Agency procedures such as record keeping, inspections, maintenance, equipment, and other elements of daily operations. Elements of the Standards that could bring added or reduced cost to the normal processes of an Local Agency are listed. Due to the variability between Local Agencies, no specific dollar amounts are presented.
- ***Potential King County Impacts*** – This indicates the potential impacts on King County of adopting the Standard. Impacts may include additional staffing requirements and impacts on County procedures, record keeping, inspections, maintenance, equipment, and other elements of daily operations by Department of Natural Resources staff. Elements of the Standards that could bring added or reduced cost to the normal County processes are listed.
- ***Potential Private Property/Ratepayer Impacts*** – Many of the Standards have the potential to impact private property owners or affect sewer rates. These impacts may include increased maintenance responsibilities for property owners, construction impacts, and cost increases or reductions.

Standard Details

The Standards and Guidelines also include a set of standard details that outline specific requirements for the construction of manholes, sewer mains, and side sewers to help prevent I/I from entering a new sewer system. The details only address specific features of sewer construction that impact I/I control, and are intended to augment current Local Agency standard details for sewer construction.

Similar to the Standards and Guidelines, the standard details were tested during the pilot project design and construction, and later revisited by the Earth Tech Team and reviewed by the E&P Subcommittee for any final revisions. A summary of the proposed changes to the working draft details and the Subcommittee's recommendations and accepted changes is included in Appendix A.

Summary of Standards and Guidelines

The following table provides a summary and brief description of the final draft Standards and Guidelines. A total of 40 standards/guidelines were incorporated into the final draft, with 28 being accepted by the Subcommittee as standards and 12 being accepted as guidelines.

Regional I/I Control Program

Summary of Listed Design Standards & Guidelines

Standard/Guideline Number & Title	Standard	Guideline	New Projects ONLY	Rehabilitation Projects ONLY	Both New & Rehabilitation Projects
PS-1: Storm Drainage Connections to the Sanitary Sewer	√				√
PS-2: Design Capacity for Pipeline Rehabilitation Projects	√			√	
PS-3: Visual Inspection of Manholes for SSES Investigations		√		√	
PS-4: Closed Circuit Television (CCTV) Inspection of Sewers for SSES Investigation		√		√	
PS-5: Smoke Testing for SSES Investigations		√		√	
PS-6: Dye Testing for SSES Investigations		√		√	
PS-7: Modeling and Engineering Analysis		√			√
PUB-1: Connections to Existing System	√				√
PUB-2: Pipe Anchoring	√				√
PUB-3: Manhole Location	√				√
PUB-4: Manhole Size	√				√
PUB-5: Manhole Joints	√				√
PUB-6: Side Sewer Connection Location and Taps	√				√
PUB-7: Sewer System Design	√				√
PUB-8: Abandonment Requirements	√				√
PUB-9: Pipe Rehabilitation Methods	√			√	
PUB-10: Manhole Rehabilitation		√		√	
PUB-11: Spot Repairs		√		√	
PUB-12: Manhole Leveling Rings	√				√
PUB-13: Manhole Lids/Inserts	√			√	
PUB-14: Root Intrusion	√			√	
PUB-15: Pipeline Leak Testing	√				√
PUB-16: Manhole Leak Inspection	√				√
PUB-17: CCTV Inspection	√				√
PUB-18: Inspection of Pipe Installation and Backfill	√				√
PUB-19: Product Specific Inspection	√				√
PUB-20: Certification, Warranty and Qualifications		√			√
PRV-1: Pipe Protection – Depth of Cover		√			√
PRV-2: Allowable Connections to Side	√				√

Standard/Guideline Number & Title	Standard	Guideline	New Projects ONLY	Rehabilitation Projects ONLY	Both New & Rehabilitation Projects
Sewers					
PRV-3: Pipe Zone Bedding and Trench Backfill		√			√
PRV-4: Pipe Materials		√			√
PRV-5: Inspection Wyes/Cleanouts	√				√
PRV-6: Lateral and Side Sewer Rehabilitation Methods		√		√	
PRV-7: Spot Repairs	√			√	
PRV-8: Root Intrusion	√			√	
PRV-9: Side Sewer/Lateral Leak Testing	√				√
PRV-10: Sanitary Side Sewer CCTV Requirements	√				√
PRV-11: Product Specific Inspection	√				√
PRV-12: Product Specific Certification	√				√
PRV-13: Bonding and Warranty Inspection	√				√
TOTAL ITEMS:	**28**	**12**	**0**	**13**	**27**

Table of Contents: Standards

B-8: Individual Design Standards: Planning Standards (PS)
B-19: Public Facilities (PUB) Standards
B-42: Private Facilities (PRV) Standards
B-60: Standard Detail Drawings

I/I CONTROL STANDARD TITLE: Storm Drainage Connections to the Sanitary Sewer

STANDARD NO. PS-1

I/I CONTROL MEASURE ISSUE:
Direct connection of storm water collection systems to the sanitary sewer reduces the capacity of the collection system and increases surcharging potential of the pipe, which can contribute to sewer deterioration and increase the potential for pipeline collapse. Some agencies allow surface water runoff collected from areas subject to high pollutant loading to discharge to the sanitary sewer. Numerous connections of this type can overload both the Local Agency sanitary sewer collection system and the regional conveyance system.

STANDARD

- No storm drainage connections shall be made to the sanitary sewer system unless approved by the Local Agency first and then by King County, and only under special circumstances. The discharges shall be defined by discharge permit, contract or other such document.

POTENTIAL LOCAL AGENCY IMPACTS

- Provisions for water quality treatment from surface water collection areas subject to high pollutant loading that the agency may have previously connected to the sanitary sewer will need to be addressed.
- Requests to connect storm water collection areas to the sanitary sewer will have to be reviewed for conformance with the special circumstances negotiated between the Local Agencies and King County.
- Special fee structures may be adopted for connection of storm drainage sources to the sanitary sewer.

POTENTIAL KING COUNTY IMPACTS

- King County and the Local Agencies will need to determine the special circumstances under which a storm drainage collection source can be connected to the sanitary sewer system.

POTENTIAL PRIVATE PROPERTY/RATEPAYER IMPACTS

- No impact.

I/I CONTROL STANDARD TITLE: Design Capacity for Pipeline Rehabilitation Projects

STANDARD NO. PS-2

I/I CONTROL MEASURE ISSUE:
Many pipeline rehabilitation techniques for I/I control involve some loss in the hydraulic capacity of the system because the technique reduces the effective internal diameter of the pipe. Hydraulic capacity loss can range from moderate for techniques such as CIPP to high for techniques such as sliplining. Surcharging and sanitary sewer overflows can result if the hydraulic capacity is reduced below the required service capacity of the line.

STANDARD

- The design of pipeline rehabilitation projects for I/I control shall consider any loss in the hydraulic capacity of the system resulting from a decrease in the effective internal diameter of a pipeline. A Professional Civil Engineer shall verify that the rehabilitated pipe maintains the required hydraulic capacity to service peak demand flow projections for the area tributary to the pipeline.

POTENTIAL LOCAL AGENCY IMPACTS

- Agencies will need to verify that the project designer has addressed the hydraulic capacity of the pipeline.

POTENTIAL KING COUNTY IMPACTS

- King County will need to verify that the project designer has addressed the hydraulic capacity of the pipeline.

POTENTIAL PRIVATE PROPERTY/RATEPAYER IMPACTS

- No impact.

I/I CONTROL GUIDELINE TITLE: Visual Inspection of Manholes for SSES Investigations

GUIDELINE NO. PS-3

I/I CONTROL MEASURE ISSUE:
Manhole inspections are one of the most important efforts of an SSES investigation because manholes can account for up to 50 percent of the I/I entering a sanitary sewer system. The inspection provides a means for viewing the manhole internally to assist in:

- Determining whether the cover is subject to ponding or surface water runoff.
- Inspecting for internal leaks.
- Analyzing structural deficiencies in the manhole structure.
- Estimating I/I quantities in the manhole.

Investigation of the internal condition of a manhole should be conducted from the inside of the manhole. Performing the investigation only from the surface and failing to thoroughly check the manhole interior commonly results in an inadequate inspection. Leaks around taps in the manhole are often confused with flow from the tap itself. If not closely inspected, leaks on the floor, in the channel, and around the pipe seals are often misidentified as eddies in the normal pipe flow.

GUIDELINE

Visual inspection of manholes shall be performed by experienced personnel trained in the proper safety measures for performing the inspection including, but not limited to, confined space entry and traffic control measures. It is recommended that the visual inspection be performed during the wet season when surrounding soils are fully saturated. Results of the manhole inspections shall be documented on a standard form which contains the following information:

- Manhole identification or reference number and street location.
- The date of the inspection.
- Name of the inspector.
- Pavement surface type and condition.
- Cover information including size, number of pick holes, gasket condition, if present, and whether the cover is locking or not.
- Frame information including size, grade, condition and presence and condition of an internal boot.
- Chimney information including material and condition, diameter, height, seal condition at cone or top slab, presence and location of manhole steps, and evidence of infiltration.
- Cone information including type and condition, seal at barrel and evidence of infiltration.
- Barrel information including type, lateral locations, diameter and condition, seal at bench and bottom slab, and evidence of infiltration. Location and size of cracks and leak locations shall be documented.
- Condition of channel and bench concrete and location of infiltration at the flow line and bench.
- Presence, location and condition of drop connections.
- Whether the manhole cover is depressed below the adjacent surface grade and whether its location makes it subject to surface water flows or ponding.
- Significant site features that may affect rehabilitation access or methods, including whether the manhole is located on private property or is located near sensitive habitat.

Investigation of the internal manhole condition shall be conducted from inside the manhole if I/I is present in the manhole. Manhole inspection results shall be archived by the Local Agency.

POTENTIAL LOCAL AGENCY IMPACTS

- Training and upgrading of staffing skills to perform the manhole inspections and interpret results, if not contracted with outside vendors.
- Additional staff resources (FTEs) may be required.
- Additional staff time for conducting inspections, interpreting results, reporting and archiving of data.

POTENTIAL KING COUNTY IMPACTS

- Training and upgrading of staffing skills to perform the manhole inspections and interpret results, if not contracted with outside vendors.
- Additional staff resources (FTEs) may be required.
- Additional staff time for conducting inspections, interpreting results, reporting and archiving of data.

POTENTIAL PRIVATE PROPERTY/RATEPAYER IMPACTS

- No impacts.

I/I CONTROL GUIDELINE TITLE: Closed Circuit Television (CCTV) Inspection of Sewers for SSES Investigations

GUIDELINE NO. PS-4

I/I CONTROL MEASURE ISSUE:
CCTV inspection during a sewer system evaluation survey provides a safe, low-cost and rapid means for viewing the sewer line internally to assist in:

- Determining the physical condition of pipe joints.
- Analyzing structural deficiencies and corrosion in pipelines.
- Identifying sources of I/I.
- Estimating quantity of infiltration.
- Identifying changes in the sewer from the last CCTV inspection.

GUIDELINE

CCTV inspection of sewers for an SSES investigation shall include a complete television inspection of the sewer main and may include laterals and side sewers that connect to the main. It is recommended that the CCTV inspection be performed during the wet season when surrounding soils are fully saturated. The decision to CCTV inspect laterals and side sewers shall be based on evidence that a significant source of the I/I originates from the laterals or side sewers. The factors that shall be considered include:

- Flow monitoring data that suggests rapid infiltration.
- Lack of I/I sources identified from CCTV inspection of the sewer main or smoke testing.

Sewer cleaning shall be performed before beginning television inspection of sewer mains, laterals and side sewers. Television inspection shall be accomplished using a closed-circuit system specifically designed for sewer inspections. For each pipeline inspected, records shall be collected on both videotape and on a field form. The videotape shall include the date of the inspection and a brief narrative description of the pipeline being inspected (manhole to manhole run, or service address) and discuss each defect that is observed. Field forms for sewer main inspections shall contain the following information:

- The date of the inspection.
- Name of CCTV crew members and their company or agency.
- The reason for the inspection.
- The location of the pipeline and the upstream and downstream manhole numbers.
- The direction of the camera's travel.
- The pipe size, type, pipe joint length, and overall footage of the inspected sewer.
- The location and a description of each service connection.
- A description of each defect observed and its distance from the point at which the viewing began.
- Severity of I/I at each defect location.

Field forms for lateral and side sewer inspections shall contain the following information:

- The date of the inspection.
- Name of CCTV crew members and their company or agency.
- The reason for the inspection.
- The service address.
- The pipe size, type, pipe joint length, and overall footage of the inspected lateral/side sewer.
- A description of each defect observed and its distance from the point at which the viewing began.
- Severity of I/I at each defect location.
- The location and a description of any observed connections to the lateral/side sewer.

Field forms and videotape of inspections shall be archived by the Local Agency so that they may be compared to subsequent CCTV inspections that are performed on the same portions of the line. Digital

footage of the CCTV inspection is an acceptable alternative to videotaped footage.

POTENTIAL LOCAL AGENCY IMPACTS

- Training and upgrading of staffing skills to perform the CCTV inspections and interpret results, if not contracted with outside vendors.
- Additional staff resources (FTEs) may be required.
- Acquisition of CCTV inspection equipment and vehicles, or contracting with outside vendors.
- Additional staff time for conducting inspections, interpreting results, reporting and archiving of data.
- Additional cost for CCTV of laterals/side sewers.

POTENTIAL KING COUNTY IMPACTS

- Training and upgrading of staffing skills to perform the CCTV inspections and interpret results, if not contracted with outside vendors.
- Additional staff resources (FTEs) may be required.
- Acquisition of additional CCTV inspection equipment and vehicles, or contracting with outside vendors.
- Additional staff time for conducting inspections, interpreting results, reporting and archiving of data.

POTENTIAL PRIVATE PROPERTY/RATEPAYER IMPACTS

- No impact.

I/I CONTROL GUIDELINE TITLE: Smoke Testing for SSES Investigations

GUIDELINE NO. PS-5

I/I CONTROL MEASURE ISSUE:
Smoke testing is the process of blowing a nontoxic smoke made from mineral oil at low pressure into the sewer system. Smoke testing provides a low-cost and rapid means for determining direct connections of inflow and rainfall-induced infiltration sources, such as:

- Roof drains
- Foundation drains
- Catch basins
- Area drains
- Abandoned building sewers
- Uncapped cleanouts
- Illegal connections
- Storm sewer cross connections

GUIDELINE

Smoke testing for SSES investigations shall be performed by experienced personnel who know the effects of groundwater table, frozen ground, wind, rain, trapped service connections and snow cover on the test findings. Smoke used for the testing shall be non-toxic, odorless and non-staining. Blower capacity shall be determined based on the size of area to be tested, but in no case shall it be less than 1,750 cfm. The vacuum effect of flowing water drawing smoke downstream shall be taken into account. Police and fire departments shall be notified daily of test locations, and residents shall be notified in advance of the testing by a written testing notice. Residents shall also be informed individually on the day of testing by personnel having proper identification. The following chronological steps shall be used for smoke testing:

- Isolate the sewer main line to be tested with plugging up to 400 feet at a time noting any surcharged line sections. Smoke will not pass through a flooded section.
- Prepare a basic smoke sketch of the area being tested including location, date and the name of the company or agency and personnel performing the test.
- Commence smoke testing using one blower at each manhole and enough smoke bombs to ensure smoke travels throughout the entire test section. Smoke shall be continuously generated while visual inspection and photography are in progress.
- Visually inspect the entire area by walking around front and back yards and around buildings. Watch for smoke leaks; typical sources are roof leaders, area drains, foundation drains, house foundations, holes in the ground over the sewer or services, areas around manholes, and catch basins. Roof vents are not to be considered as smoke leaks.
- Document whether or not smoke is observed to be discharging through the roof vents for each house and building included in the test area.
- Photograph all smoke leaks.
- Show the location of each leak on a sketch. Include the photograph number and compass directions taken, and a description of the leak including address. Provide dimensions to the leak from at least two easily identified site features and the estimated area (square footage) and surface type (i.e., grass, pavement, etc.) drained by the leak.
- Photographs shall show the maximum amount of smoke emitted from the leak and the exact source of the leak. Photographs shall be taken from far enough back to provide a physical reference to the location of the smoke. They shall be numbered consecutively to ensure leaks can be identified at a later date.

Potential Local Agency Impacts

- Time and resources to conduct smoke testing, if not already part of agency procedures.
- Acquisition of smoke testing equipment, if not already owned.
- Cost for additional staff workload, or contract with outside vendor.

Potential King County Impacts

- Cost for additional staff workload, and contract with outside vendor.

Potential Private Property/Ratepayer Impacts

- Identified defects and illicit connections on private property may need to be corrected by the property owner.

I/I CONTROL GUIDELINE TITLE: Dye Testing for SSES Investigations

GUIDELINE NO. PS-6

I/I CONTROL MEASURE ISSUE:
Dye testing is a rainfall simulation technique used to identify specific defects that can contribute I/I during rainfall or snowmelt. Dye testing can also be effective in quantifying the amount of I/I that can enter a section of sewer or specific defect under a controlled runoff situation. Depending on the sources of I/I to be identified and the configuration of the runoff situation being simulated, the procedures for dye testing differ. Five examples of dye testing situations are as follows:

- **Determining Conditions Caused by Storm Drains**—Storm drains that parallel or cross sanitary sewer pipes and have an invert elevation higher than the crown elevation of the sanitary sewer can be a source of rainfall-induced infiltration or inflow. They are inflow sources if there are cross connections between the storm drain and the sanitary sewer; they are infiltration sources if stormwater can exfiltrate from them, percolate through soil, and enter the sanitary sewer through pipe or joint defects.
- **Determining Conditions Caused by Stream or Ditch Sections**—Streams and stormwater ditches are inflow sources if there are cross connections between them and the sanitary sewer; they are infiltration sources if the surface water can percolate through soil and enter the sanitary sewer through pipe or joint defects.
- **Identifying I/I Sources from Private Property**—Roof leaders; basement, yard and area drains; foundation drains; abandoned building sewers; and faulty connections are sources of private property defects that can be identified by dye testing.
- **Identifying Structurally Damaged Manholes**—Dye testing can be used to verify structurally damaged manholes that leak when subjected to flooding or when groundwater elevations are high.
- **Verifying Sources Found by Other Testing Means**—Dye testing can verify suspected sources of I/I identified in a visual survey or smoke testing study. Examples include manholes affected by surface water runoff, holes in the ground smoking over services or sewer mains, and cracks in the street pavement that are smoking.

GUIDELINE

Dye testing for SSES investigations shall be performed by experienced personnel trained in the proper safety measures for performing the testing including, but not limited to, confined space entry into storm drain and sanitary sewer manholes, measures for controlling water head buildup behind plugs, and traffic control measures. A fluorescent dye having a distinct color readily detectible by eye shall be used for dye testing. The dye shall be safe to handle, visible in low concentrations, miscible in water, biodegradable and inert to solids and debris in the sewer. Procedures for dye testing shall be as follows:

Determining Conditions Caused by Storm Drain

1. Plug both ends of the storm drain section to be tested with sand bags or sewer plugs and block all overflow and bypass points in the storm drain section. Bypass flow around the section under test if necessary.
2. Fill the storm drain section and stormwater inlets or catch basins to just below the grate with water. Add dye to the water.
3. Monitor the next downstream manhole in the sanitary sewer system for evidence of dyed water.
4. Measure the flow in the sanitary sewer manhole before and during dye testing. As an alternative, measure flow simultaneously at both the upstream and downstream sanitary manholes during the test.
5. Record the location of storm drain and sanitary sewer lines being tested; the time and duration of

the tests; the manholes where the flows are monitored; the observed presence, concentration and travel time of the dyed water to the flow monitoring manholes; and the soil characteristics.

Determining Conditions Caused by Streams or Ditch Sections

1. Plug or dam stream sections, ditch sections or ponded areas to be tested and fill to desired level with dyed water. Bypass flow around the section under test if necessary.
2. Follow steps 3 through 5 above.

Identifying Sources on Private Property

1. Notify property owners and receive permission for testing in advance of testing.
2. Insert dyed water into suspected inflow source and monitor closest downstream sanitary sewer manhole for evidence of dyed water.
3. Record the date of the test; address and type of the inflow source; duration of the test; the manholes where the flows are monitored; and the observed presence, concentration and travel time of the dyed water to the flow monitoring manholes.

Identifying Structurally Damaged Manholes

1. Flood the area around suspected manholes with dyed water.
2. Monitor manhole frame, chimney, cone and manhole walls for entry of dyed water.
3. Record the date of the test; manhole number; duration of the test; and the observed presence, concentration and travel time of the dyed water into the manhole.

Verifying Sources Found by Other Testing Means

1. Notify property owners and receive permission for testing in advance of testing if performed on private property.
2. Flood the area where visual survey or smoke testing study revealed potential I/I source. It may be necessary to restrict runoff from the area with sand bags to allow the area to become saturated.
3. Monitor the next downstream manhole in the sanitary sewer system for evidence of dyed water.
4. Measure the flow in the sanitary sewer manhole before and during dye testing. As an alternative, measure flow simultaneously at both the upstream and downstream sanitary manholes during the test.
5. Record the location of sources being tested, including address if on private property; the time and duration of the tests; the manholes where the flows are monitored; the observed presence, concentration and travel time of the dyed water to the flow monitoring manholes; and the soil characteristics.

A field log shall be filled out for all dye tests that are performed, regardless of whether a positive transference to the sanitary sewer is observed. A sketch of each testing setup shall be prepared showing testing location, manholes checked, dye transference information, and flooding time. The sketch shall also include the date and time of the test and the names of personnel. A photograph of each testing setup shall be taken and numbered. Photographs of the testing setup shall be referenced on the setup sketch. The appropriate agencies shall be notified of impending dye testing prior to test commencement.

Potential Local Agency Impacts

- Obtaining required permits for handling and disposal of test water volumes.
- Obtaining and appropriately disposing of test water volumes.
- Cost for additional staff workload, or contract with outside vendor.

Potential King County Impacts

- Obtaining required permits for handling and disposal of test water volumes.
- Obtaining and appropriately disposing of test water volumes.
- Cost for additional staff workload, or contract with outside vendor.

Potential Private Property/Ratepayer Impacts

- Property owners need to provide permission to perform testing on private property.
- Some disturbance to yards/landscaping could occur during testing.

I/I CONTROL GUIDELINE TITLE: Modeling and Engineering Analysis

GUIDELINE NO. PS-7

I/I CONTROL MEASURE ISSUE:
Following the completion of the basin modeling performed during the Regional I/I Control Program, the modeling basins should be reevaluated with updated flow and system network information to provide an ongoing tool for monitoring the integrity of the sewer system as it both ages and expands. Hydraulic models can also be used to evaluate system response to potential high-flow sources such as high-water-use industries, adjoining jurisdictions, or large developments.

GUIDELINE

- Basin modeling shall be conducted to assess system loading and capacity for ongoing and future sewer planning efforts. A dynamic software modeling program should be used that can be used to calibrate measured flow data with rainfall measured during the corresponding storm. The maximum model basin size shall be equivalent to the basins modeled by King County. Consideration should be given to selecting software that will provide output compatible with the King County model. Flow data shall be obtained by the Local Agency using the same methodology developed in the Regional I/I Control Program, including measurement of wet-weather/storm conditions and concurrent rainfall data. The flow monitoring preferably will coincide with the basins delineated for the King County I/I Control Program.
- Development of a reliable, well-calibrated model requires good as-built plans and maps, and long-term flow monitoring data. The agency shall maintain an as-built record for new and modified piping.

POTENTIAL LOCAL AGENCY IMPACTS

- Competency of staff in computer modeling and interpretation, or outsourcing to a consultant on a periodic basis.
- Proactive planning and logistics for maintaining an as-built database.
- Purchase of license for a sewer software model, or cost to develop alternative model.
- Cost for training and operation of model by agency staff.
- Expense for flow monitoring equipment and staff, whether purchased or leased/rented on a periodic basis.

POTENTIAL KING COUNTY IMPACTS

- No impact, since King County now performs modeling analysis on a regular basis.

POTENTIAL PRIVATE PROPERTY/RATEPAYER IMPACTS

- No impact.

I/I CONTROL STANDARD TITLE: Connections to Existing System

STANDARD NO. PUB-1

I/I CONTROL MEASURE ISSUE:
When new connections are made to the existing system, I/I potential exists from three general locations: 1) the connection itself leaks, 2) the system being added has leaks, and/or 3) the system being added has illegal connections that are inflow sources.

STANDARD

- Connections to the existing system will only be allowed at manholes, to a main via an existing tee or a tap, or to the end of an existing pipe that meets all applicable I/I Standards.
- Where a new manhole is being installed in an existing system, the I/I Standards for new manholes shall apply.

Testing and inspection:

- The new conveyance system to be connected shall be inspected to confirm that no illicit connections contributing inflow have been added.
- At manhole locations, the connection at the existing manhole shall be visually inspected for water tightness after the pipe has been completely backfilled and groundwater has returned to its natural elevation. The new line shall not be put into service until the connection has been inspected and approved.

POTENTIAL LOCAL AGENCY IMPACTS

- Inspection requirements to confirm work performed correctly.

POTENTIAL KING COUNTY IMPACTS

- No impact. King County already providing full-time inspection for construction and testing of new pipelines.

POTENTIAL PRIVATE PROPERTY / RATEPAYER IMPACTS

- No impact.

I/I CONTROL STANDARD TITLE: Sewers on Steep Slopes

STANDARD NO. PUB-2

I/I CONTROL MEASURE ISSUE:
Pipe that is installed on steep slopes is more susceptible to movement, breakage, and slipped joints, which may allow I/I into the system. Special measures to anchor pipes installed on steep slopes may be required depending on the stability of the existing soils, local groundwater conditions, and the quality of the bedding and backfill construction during pipe installation.

STANDARD

- Sewer mains on steep slopes shall be designed by a Professional Engineer to ensure the integrity of the system to prevent leakage and minimize I/I.

POTENTIAL LOCAL AGENCY IMPACTS

- Agencies will need to verify that a Professional Engineer has addressed pipe anchoring requirements on steep slopes.
- Pipe anchors can cost as much as $1,000 each; however anchors are typically a requirement on steep slope pipeline installations.
- Inspectors will need to verify that anchors are installed as designed.

POTENTIAL KING COUNTY IMPACTS

- The County will need to verify that a Professional Engineer has addressed pipe anchoring requirements on steep slopes.
- Pipe anchors can cost as much as $1,000 each; however anchors are typically a requirement on steep slope pipeline installations.
- Inspectors will need to verify that anchors are installed as designed.

POTENTIAL PRIVATE PROPERTY/RATEPAYER IMPACTS

- No impact.

I/I CONTROL STANDARD TITLE: Manhole Location and Covers

STANDARD NO. PUB-3

I/I CONTROL MEASURE ISSUE:
Placement of manholes is important for two reasons. The potential for I/I will decrease by not placing it in a location subject to surface water flows or ponding. Proper location can improve an agency's ability to inspect and maintain the system, thus reducing I/I. When manholes must be placed in areas subject to surface water flows, inflow can be prevented by providing a watertight frame and cover system.

STANDARD

- Manholes shall not be installed in areas subject to surface inundation such as pavement depressions and gutters. If this cannot be avoided, then the entire manhole, including cover, shall be designed as a watertight system. Buoyancy of the watertight manhole shall be accounted for in the design. For manholes placed in lakes or ponds a special watertight manhole, including access system, shall be designed to prevent leakage and to insure maintainability.
- For manholes located in paved roadways, parking lots, or other areas that become subject to channelized stormwater flow due to re-grading, the manhole shall be retrofit with a watertight frame and cover system to prevent inflow.
- Watertight frame and covers shall consist of a solid, gasketed cover or an approved manhole cover insert that stops the inflow of surface water into the manhole. Manhole cover inserts may be installed beneath a standard cover. Manhole cover inserts shall be in conformance with Standard Detail MH-3.

POTENTIAL LOCAL AGENCY IMPACTS

- Added cost for watertight design in areas that may not now be required to be watertight.
- Sewer system plan review would need to include an assessment of locations where manhole cover inserts are required.
- Field inspection to ensure watertight manhole covers are installed where specified would be required.

POTENTIAL KING COUNTY IMPACTS

- Added cost for watertight design in areas that may not now be required to be watertight.
- Sewer system plan review would need to include an assessment of locations where manhole cover inserts are required.
- Field inspection to ensure watertight manhole covers are installed where specified would be required.

POTENTIAL PRIVATE PROPERTY/RATEPAYER IMPACTS

- Potentially higher ratepayer cost for watertight design.

I/I CONTROL STANDARD TITLE: Manhole Size

STANDARD NO. PUB-4

I/I CONTROL MEASURE ISSUE:
Providing a watertight seal at pipe penetrations is difficult when new or existing manholes are too small to accommodate all penetrations for incoming and outgoing pipes. Provisions to provide a minimum distance between manhole knockouts and minimum manhole sizes based on pipe size insure a watertight pipe connection can be made and help prevent structural failure of the manhole.

Standard

- New manholes shall be sized so that the minimum distance between knockouts is in accordance with the requirements of the WSDOT/APWA Standard Specifications and the manhole manufacturers standards. A connection detail stamped and signed by a Professional Civil Engineer and approved by the manhole manufacturer shall be provided where the minimum distance between openings cannot be maintained.

Potential Local Agency Impacts

- Review of manhole shop drawings are required to insure that the minimum sizing and spacing requirements are being met, or that a connection detail prepared by a Professional Engineer is being provided.
- Manhole construction costs may increase moderately in those agencies that allow contractors to make connections to existing manholes or size new manholes without requiring the specified minimum sizes or distance between knockouts and adjacent pipe connections.
- Inspection of manhole construction is required to insure that the pipe locations and connections are as detailed and not field modified.

Potential King County Impacts

- Review of manhole shop drawings is required to insure that the minimum sizing and spacing requirements are being met, or that a connection detail prepared by a Professional Engineer is being provided.
- Inspection of manhole construction is required to insure that the pipe locations and connections are as detailed and not field modified.

Potential Private Property/Ratepayer Impacts

- Potentially higher ratepayer costs in those agencies that do not require minimum distances between knockouts.

I/I CONTROL STANDARD TITLE: Manhole Joints

STANDARD NO. PUB-5

I/I CONTROL MEASURE ISSUE:
Joints in manholes present potential sources of I/I from the precast concrete manhole segments to adjustments rings and pipe penetrations.

STANDARD

- All manholes shall be completely watertight from the top of the casting down.
- Manholes materials and construction shall be in accordance with WSDOT/APWA Standard Specifications except as modified by this standard and Standard Details MH-1 and MH-2.
- Precast concrete manhole sections shall be joined with either rubber or flexible plastic gaskets.
- All lifting holes shall be completely filled with non-shrink grout.
- Typical pipe penetrations through precast concrete sections shall be either factory knockouts or core drilled (not line drilled or rough broken) cutouts. Pipe shall enter the manhole through a rubber gasketed entry coupling specifically design for a flexible, watertight connection either cast into the manhole section or grouted in place with non-shrink grout.
- Where a new manhole is being constructed as a "saddle manhole", which is built around an existing sewer main, the manhole shall be designed by a Professional Civil Engineer. The saddle manhole shall be of sufficient diameter to provide a watertight connection between the manhole and the wall of the existing pipe.

POTENTIAL LOCAL AGENCY IMPACTS

- No major impact because most agencies currently meet this standard.

POTENTIAL KING COUNTY IMPACTS

- No impact because King County currently meets this standard.

POTENTIAL PRIVATE PROPERTY/RATEPAYER IMPACTS

- No impacts.

I/I CONTROL STANDARD TITLE: Side Sewer Connection Location and Taps

STANDARD NO. PUB-6

I/I CONTROL MEASURE ISSUE:
The location of a side sewer connection to a mainline in an area with difficult access or in such a manner as to induce unnecessary stress on the system can make them more prone to damage and less apt to be maintained, thus resulting in I/I. Good construction techniques and proper selection of materials for side sewer taps can reduce I/I by protecting the mainline from damage by providing a watertight seal.

STANDARD

- No side sewers shall be connected to a main located in a lake or similar body of water except under special circumstances.
- If a side sewer must be connected at a manhole, then it shall penetrate the manhole wall through a watertight rubber gasketed factory manhole adapter specially designed for the side sewer material type. A mortared connection at a manhole will not be permitted unless the structure is constructed as a saddle manhole.
- All connections to existing mains shall be made at an existing tee fitting or by core drilling a hole in the existing sewer main and installing an approved gasketed factory sewer saddle or cutting in a gasketed factory tee. The Local Agency may consider other connection alternatives if the method can be demonstrated to provide a watertight connection. Line drilling or rough breakouts shall not be used.
- For a tapped connection to the mainline, the hole shall be as small as possible to accommodate the outside diameter of the side sewer pipe with adequate space for minor angle alignment adjustments of the side sewer. The connection shall be made with a factory saddle specifically designed for side sewer connections and fabricated of corrosion resistant materials and mechanically attached to the pipe to withstand the anticipated loads. The saddle shall provide a rubber gasketed joint between the sewer main and the saddle.
- Factory tees shall be appropriate for the soil conditions encountered in the connection location and shall have rubber gasketed joints. Material selection shall take into account the soil corrosistivity, compatibility of materials with the existing pipe, strength requirements, and bedding/backfill conditions. The tee shall be connected to the existing sewer main pipe by short sections of plain end pipe and an approved stainless steel repair clamp. The short sections of pipe shall match the sewer main pipe material and shall meet or exceed the strength of the existing system. Stainless steel repair clamps shall be gasketed, with a minimum length of two pipe diameters, and assembled with all stainless steel bolts and nuts.

POTENTIAL LOCAL AGENCY IMPACTS

- Inspection requirements to confirm compliance with standards or do tap itself.
- Moderate cost of using saddles.
- High cost of using cut in tees and dealing with active sewer line.

POTENTIAL KING COUNTY IMPACTS

- No impact, since King County does not normally allow side sewer connections to its conveyance system.

POTENTIAL PRIVATE PROPERTY/RATEPAYER IMPACTS

- Added cost for doing the tee when the side sewer is too large for a tap.
- Added cost to core drill the pipe.

I/I CONTROL STANDARD TITLE: Sewer System Design

STANDARD NO. PUB-7

I/I CONTROL MEASURE ISSUE:

Structural failure of pipe and manholes can lead to infiltration of groundwater. The following are key factors contributing to the impairment of a sewer systems' structural abilities, resulting in I/I:

- Sewer mains, manholes, laterals and side sewers that are not properly supported are subject to vertical displacements over time, causing joints to open and pipeline trenches to settle, producing cracks or breaks in sections of the pipe.
- Materials must be appropriate for design conditions and the ground conditions present. Pipeline failures often occur due to the misuse of materials.
- Structural failure of sewer pipes allows groundwater to enter the system at the point of connection to manholes. Deep cuts and poor ground conditions often result in a larger than necessary excavation, leading to unequal settlement if uniform support is not provided for the pipe and manhole. Inadequate support often causes failure of the pipe in shear at the manhole and provides a point of entry for groundwater.

Recognizing past situations that have allowed extraneous flows to enter the system and requiring sound and appropriate design measures to prevent these deficiencies on future projects can greatly reduce future I/I.

STANDARD

- Sewer system design shall be performed by a civil engineer licensed in the State of Washington. The designer shall verify that sound and appropriate standards and measures have been employed in the design of new sewer systems. This shall include the choice of sewer materials for the design conditions, pipe bedding and backfill requirements, and the evaluation for pipe casing requirements.

POTENTIAL LOCAL AGENCY IMPACTS

- Agencies will need to verify that the designer has adequately addressed elements of the sewer design that relate to the structural integrity of the system.

POTENTIAL KING COUNTY IMPACTS

- King County will need to verify that the designer has adequately addressed elements of the sewer design that relate to the structural integrity of the system.

POTENTIAL PRIVATE PROPERTY/RATEPAYER IMPACTS

- No impacts.

I/I CONTROL STANDARD TITLE: Abandonment Requirements

STANDARD NO. PUB-8

I/I CONTROL MEASURE ISSUE:
Abandoned sewer pipes and manholes that are not completely isolated from the remaining system pose potential sources for I/I. Abandoned sewer mains are defined as any section of pipe extended beyond a manhole with no services attached and no plan for future extension or service connection(s). Abandoned side sewers fall into two categories. If no future connection is anticipated, then the entire side sewer from the main is considered abandoned. If a future connection is anticipated, then the side sewer shall be considered abandoned at the property line.

STANDARD

- Manholes: Manholes shall not be abandoned if they are on the end of an active sewer main. If the manhole is part of an abandoned pipe system, then it shall be completely filled and all pipes physically connected to the manhole shall be plugged.
- Sewer Main Pipe: Abandoned sewer main pipes shall be plugged with a minimum of length of 3 pipe diameters with a non-shrink grout or other impermeable material at the manhole. The pipe shall be prepared to provide a watertight bond between the plug material and existing pipe.
- Sewer Main Abandonment Inspection: The plug shall be visually inspected for any leaks during the wet season while under warranty.
- Side Sewers: Abandoned side sewer pipe shall be capped with a watertight plug for future use or plugged with a minimum of length of 3 pipe diameters with a non-shrink grout or other impermeable material. The pipe shall be prepared to provide a watertight bond between the plug material and existing pipe.
- Side Sewer Abandonment Inspection: Plugged side sewers shall be CCTV inspected for leakage at the sewer main connection during the wet season while under warranty.

POTENTIAL LOCAL AGENCY IMPACTS

- Inspection requirements to confirm that the work was done correctly.

POTENTIAL KING COUNTY IMPACTS

- No impact, since pipe abandonment is not anticipated in the King County system.

POTENTIAL PRIVATE PROPERTY/RATEPAYER IMPACTS

- Potentially higher ratepayer costs for increased inspection costs.

I/I CONTROL STANDARD TITLE: Pipe Rehabilitation Methods

GUIDELINE NO. PUB-9

I/I CONTROL MEASURE ISSUE:
Once the decision has been made to rehabilitate a sewer to control I/I, several alternatives may be used to replace the existing sewer. These include trenchless rehabilitation techniques such as cure-in-place lining, pipe bursting and conventional dig and replace. An evaluation should be made to determine suitability (technical and cost effectiveness) of trenchless methods versus conventional dig and replacement of the sewer. The technical evaluation should assess specific issues such as the sewer location, alignment, condition of the pipe being replaced, and future service requirements for the sewer. If the rehabilitation technique will reduce the cross sectional flow area of the pipe the technical evaluation should consider loss in hydraulic capacity of the line in accordance with the I/I Design Capacity for Pipeline Standard. The alternative pipe rehabilitation methods that should be considered include:

Pipe bursting is a trenchless pipeline rehabilitation method that can be used to replace sewer pipes. Reduction of excess flow is achieved by eliminating sources of infiltration in the piping being replaced. It is possible to increase the size of the pipe; however, site specific constraints may limit the ability to increase the size. Using pipe bursting to replace a pipe may be restricted depending upon adjacent utilities, proximity to a road surface, the type of existing pipe being replaced, and soil conditions. There are a number of variations on pipe bursting such as pneumatic, hydraulic expansion, and static pull systems. All of these displace the old pipe into the adjacent ground and pull a new pipe in to replace the old pipe. There are also related processes such as pipe reaming, which is a variation of horizontal directional drilling, where pieces of the old pipe are removed rather than pushing them into the adjacent soil. Pipe bursting may be used for mainline, lateral, and side sewer repair. The most common pipe material used is HDPE but other types of pipe material such as cast iron, MDPE, and ABS can be used for the replacement pipe.

Cure-in-place pipe (CIPP) liner is a trenchless pipeline rehabilitation method that can be used to repair existing sewer pipes. Reduction of excess flow is achieved by eliminating sources of infiltration in the piping being rehabilitated. CIPP liner involves inverting an epoxy-resin-impregnated flexible tube into an existing line using hydrostatic head. The resin is then cured using heat to produce a pipe inside the existing pipe. The outside diameter of the replacement pipe is smaller than the existing pipe to allow the system to be installed. Capacity in the pipeline will be reduced because of the reduction in pipe size.

Slip lining is a trenchless pipeline rehabilitation method that can be used to replace sewer pipes. Reduction of excess flow is achieved by eliminating sources of infiltration in the pipe being replaced. Slip lining involves pushing or pulling a replacement pipe into an existing pipe. The outside diameter of the replacement pipe is smaller than the inside diameter of the existing pipe to allow the replacement pipe to be installed. Capacity in the pipeline will be reduced because of the reduction in pipe size. A variety of pipe materials may be used for slip lining including HDPE, ductile iron, PVC, concrete and fiberglass. The annular space should be grouted unless there are project specific reasons to do otherwise.

Fold and form lining is a trenchless pipeline rehabilitation method that can be used to repair existing sewer pipes. Reduction of excess flow is achieved by eliminating sources of infiltration in the piping being replaced. The fold-and-form process involves inserting a heated PVC or HDPE thermoplastic liner, folded or deformed into a U-shape, into an existing sewer and re-rounding the liner using heat and pressure to produce a pipe inside the existing pipe. The outside diameter of the replacement pipe is smaller than the existing pipe to allow the system to be installed. Capacity in the pipeline will be reduced because of the reduction in pipe size.

Guideline

- Construction standards for pipe bursting, cure-in-place lining, slip-lining and folded and formed liners shall be as follows:
- Pipe Bursting:
  - Pipe bursting shall meet the requirements of the King County Regional Inflow and Infiltration Control Program Guide Specifications.
- Cure-in-Place Lining:
  - Cure-in-place-lining shall meet the requirements of the King County Regional Inflow and Infiltration Control Program Guide Specifications.
  - Service connections to the new lined pipe shall be made water tight by grouting the area where the service connection enters the lined pipe or by installing a service connection rehabilitation liner in conformance with the King County Regional Inflow and Infiltration Control Program Guide Specifications.
- Slip Lining:
  - Slip lining shall conform to ASTM F585-94 – "Standard Practice for Insertion of Flexible Polyethylene Pipe Into Existing Sewers".
  - The type of replacement pipe used shall meet or exceed the requirements for sewer pipe materials in I/I Pipe Materials Standard and shall be suitable for the slip lining process being used.
  - New pipe connections to manholes shall provide a water tight connection suitable for the type of replacement pipe being used and in accordance with the I/I Connections to Existing System Standard. Acceptable manhole connections may include commercially available manhole connection boots or the pipe grouted into the manhole pipe penetration with a seep ring on the pipe.
  - Lateral connections to the new pipe shall also be made using commercially available fittings suitable for the type of replacement pipe. For HDPE pipe, lateral wyes or tees shall be made using manufacturer provided fusion welded fittings or other Local Agency approved fittings specifically manufactured for HDPE pipe.
  - The annular space shall be grouted unless there are project specific reasons to do otherwise. Issues to be considered relative to the annular space grouting include grouting pressures and pipe restraint to prevent floatation.
- Fold and Form:
  - Fold and form-lining shall meet the requirements of the King County Regional Inflow and Infiltration Control Program Guide Specifications.

Potential Local Agency Impacts

- Inspection requirements to confirm that the trenchless rehabilitation is done correctly.

Potential King County Impacts

- Inspection requirements to confirm that the trenchless rehabilitation is done correctly.

Potential Private Property/Ratepayer Impacts

- No impact.

I/I CONTROL STANDARD TITLE: Manhole Rehabilitation

GUIDELINE NO. PUB-10

I/I CONTROL MEASURE ISSUE:
Manhole rehabilitation can be used to eliminate sources of both infiltration and inflow directly into the structure where the rehabilitation is determined to be more cost effective than replacement of the manhole. There are a variety of rehabilitation techniques, including manhole grouting, cementitious spray-on lining, epoxy linings, manhole inserts, and cure-in-place liners. Many of the methods provide benefits other than just I/I reduction such as protection from internal corrosion due to hydrogen sulfide. Manhole rehabilitation for I/I reduction may also include replacement of manhole rings or replacement of the ring and cover.

GUIDELINE

- When a manhole is rehabilitated for I/I reduction, consideration shall be given to factors that contributed to the current condition and whether the selected rehabilitation will prevent the potential recurrence of I/I. Rehabilitation techniques include spray on coatings, cure-in-place linings, chemical grouting, or a rigid liner installed within the existing manhole. Coatings, linings and chemical grouting for manhole rehabilitation shall meet the requirements of the King County Regional Inflow and Infiltration Control Program Guide Specifications.

POTENTIAL LOCAL AGENCY IMPACTS

- Inspection requirements to confirm that the manhole preparation and rehabilitation is done correctly.
- Potential surface disruptions resulting from construction of the rehabilitation.
- Costs to test the completed manhole rehabilitation.

POTENTIAL KING COUNTY IMPACTS

- Costs to test the completed manhole rehabilitation.
- Inspection requirements to confirm that the manhole preparation and rehabilitation is done correctly.

POTENTIAL PRIVATE PROPERTY/RATEPAYER IMPACTS

- Potential inconveniences resulting from rehabilitation construction activities.

I/I CONTROL STANDARD TITLE: Spot Repairs

GUIDELINE NO. PUB-11

I/I CONTROL MEASURE ISSUE:
Pipeline spot repairs are repairs to specific deficiencies in a pipeline, such as a specific leaking pipe joint. These repairs can be a cost effective way to eliminate I/I in sections of a pipeline that are sound except for a few point locations. Only those specific deficiencies in the pipeline are repaired. In general, in pipeline sections that require three or more spot repairs, it is often more cost effective to consider the entire manhole-to-manhole run of pipe for rehabilitation or replacement.

GUIDELINE

- Spot repairs can be accomplished by several different methods from trenchless systems like short CIPP liners, to injecting epoxy resins or chemical grout into leaking pipe joints, to dig and repair with structural grouting sleeves or short sections of pipe replacement. The repair method shall address whether the defect is structural or limited to intact leaky joint. Spot repairs may be needed to properly prepare the line for some of the manhole-to-manhole rehabilitation/replacement options.
- For a dig and replace spot repair, the section of the sewer main shall be removed to the nearest joint and replaced with new pipe. The new section of pipe shall be installed with repair couplings meeting the Local Agency's approval but in any case shall provide a water tight repair.
- Trenchless spot repairs shall meet the I/I standard for the particular rehabilitation method used.
- If SSES reveals there are 3 or more defects that require repair on a manhole to manhole run of sewer main, it is recommended that the entire run of sewer be evaluated for rehabilitation or replacement.

POTENTIAL LOCAL AGENCY IMPACTS

- The costs associated with testing and inspecting the spot repair.
- Surface disruptions from construction activities may inconvenience the public.

POTENTIAL KING COUNTY IMPACTS

- The costs associated with testing and inspecting the spot repair.

POTENTIAL PRIVATE PROPERTY/RATEPAYER IMPACTS

- No impact.

I/I CONTROL STANDARD TITLE: Manhole Leveling Rings

STANDARD NO. PUB-12

I/I CONTROL MEASURE ISSUE:
The manhole grade-adjustment rings for the frame and cover can be a source of infiltration.

STANDARD

- Materials for grade adjustment of manholes shall consist of precast concrete rings specifically designed for the diameter of the manhole entrance and anticipated loads. Other materials for the rings may be considered provided they provide adequate support, are impermeable, provide a watertight seal, and have a serviceable life expectancy of 50 years or over.
- Adjustments of the frame and cover shall be made with precast concrete rings and joined with mortar meeting the requirements of Section 9-04.3 of the WSDOT/APWA Standard Specifications or flexible plastic/mastic gaskets. If leveling rings are used that are manufactured from materials other than concrete, the installation of the rings and adjustment to grade shall be in accordance with the manufacturer's recommendations.
- If mortar joints are used, consideration shall be given to infiltration leakage that could occur through the rings. This may include wrapping the full height of the exterior of the manhole rings with a membrane sealing system.
- Testing and inspection: If mortar joints are used, they shall be inspected before backfilling.

POTENTIAL LOCAL AGENCY IMPACTS

- Additional cost of inspection and testing of the manhole.

POTENTIAL KING COUNTY IMPACTS

- Additional cost of inspection and testing of the manhole.

POTENTIAL PRIVATE PROPERTY/RATEPAYER IMPACTS

- No impacts.

I/I CONTROL STANDARD TITLE: Manhole Lids/Inserts

STANDARD NO. PUB-13

I/I CONTROL MEASURE ISSUE:
Older style manhole covers may contain numerous pick holes that allow inflow into the collection system during storm events. Old and new manhole covers are both susceptible to inflow through or around the cover if water ponds over the cover. Eliminating this source of inflow will reduce excess flow from entering the system. Replacing the cover with a new cover will reduce or eliminate this source of inflow.

STANDARD

- Manhole covers that have been identified through an SSES as being susceptible to inflow may be replaced with a gasketed solid cover or just the ring or cover may be replaced if it is determined to be the source of the problem.
- In lieu of replacing the cover a manhole insert may be installed under the existing cover to eliminate or reduce the volume of inflow that enters the sewer. Manhole inserts are metal or plastic pans installed just under the manhole cover and are supported by the manhole ring. All materials used in the manufacture of manhole inserts shall be plastic or stainless steel in accordance with Standard Detail MH-3.

POTENTIAL LOCAL AGENCY IMPACTS

- Replacement of the entire manhole ring and cover assembly will be costly.
- Installation will be disruptive to traffic if the manhole is located in a street.
- Solid, gasketed covers cost approximately $100 more than conventional covers with pick holes.

POTENTIAL KING COUNTY IMPACTS

- Replacement of the entire manhole ring and cover assembly will be costly.
- Installation will be disruptive to traffic if the manhole is located in a street.
- Solid, gasketed covers cost approximately $100 more than conventional covers with pick holes.

POTENTIAL PRIVATE PROPERTY/RATEPAYER IMPACTS

- Possibly traffic inconveniences during the ring and cover replacement.

I/I CONTROL STANDARD TITLE: Root Intrusion

STANDARD NO. PUB-14

I/I CONTROL MEASURE ISSUE:
Pipelines that have roots protruding in the pipe have a breach in the piping system at a joint and/or a break in the pipe. This breach is a potential source for infiltration. Cutting of the roots inside the pipe and treatment with a root-inhibiting chemical will not remove infiltration. Root intrusion can cause operational problems by plugging the sewer and will likely need to be corrected to address this problem.

Standard

- When roots are found in sewer piping and manholes, the point of entry shall be located by CCTV. If infiltration occurs at the point of root intrusion it shall be evaluated for removal during the wet season when surrounding soils are fully saturated. Correction of infiltration caused by roots can be accomplished by performing a spot repair by either a conventional dig and repair or using a trenchless repair method.
- If the segment of sewer indicates potential for additional root intrusion, consideration shall be given to replacing the sewer using either dig and replace or trenchless methods.

Potential Local Agency Impacts

- Added cost to test and repair the entire section of main from manhole-to-manhole.

Potential King County Impacts

- No impact, since root intrusion is not usually a problem on King County interceptor sewers.

Potential Private Property/Ratepayer Impacts

- Added cost due to increased cost to maintain system.
- Cost savings or reduction in rate increase due to less I&I treatment costs.

I/I CONTROL STANDARD TITLE: Pipeline Leak Testing

STANDARD NO. PUB-15

I/I CONTROL MEASURE ISSUE:
Several aspects of sewer main pipe installation, if not properly designed and constructed, may result in infiltration entering the finished pipeline. Leakage testing of the assembled sewer pipeline immediately following construction is one of the final opportunities for verification that the pipeline meets acceptable I/I criteria prior to being placed into service.

Leakage testing of newly installed replacement sewer mains may not be feasible because active side sewers are being installed on the new line as construction progresses. For these cases, CCTV inspection of the completed line will be required in lieu of a leakage test.

STANDARD

- Acceptance criteria for substantial completion following construction of new and rehabilitated pipelines shall include testing requirements to ensure that the sewer pipelines and connections to the sewer pipelines, as constructed, meet specified leakage limitations. Where new sewer mains can be isolated from active flow, the pipeline shall be tested by either a water test or a low pressure air test. For those cases where flow cannot be routed around the new main, the pipeline shall be CCTV inspected for leakage.
- The water test shall be an infiltration test if the sewer main is installed below the groundwater level. The water test shall be an exfiltration test if the sewer main is installed above the groundwater level. Testing shall be in accordance with the WSDOT/APWA Standard Specifications.
- Low pressure air testing shall conform to the requirements of the WSDOT/APWA Standard Specifications.
- Where wastewater flow cannot be routed around the new main as construction progresses, the pipeline shall be CCTV inspected for leakage. While under warranty, it is recommended that a visual inspection for leakage be performed during the wet season when surrounding soils are fully saturated.

POTENTIAL LOCAL AGENCY IMPACTS

- Possible additional cost and additional staffing requirements for acceptance and inspection verification.

POTENTIAL KING COUNTY IMPACTS

- Possible additional cost and additional staffing requirements for acceptance and inspection verification.

POTENTIAL PRIVATE PROPERTY/RATEPAYER IMPACTS

- Potentially higher ratepayer costs for increased visual inspection/verification requirements.

I/I CONTROL STANDARD TITLE: Manhole Leak Inspection

STANDARD NO. PUB-16

I/I CONTROL MEASURE ISSUE:
Several aspects of sewer manhole installation, if not properly designed and constructed, may result in infiltration entering the finished sewer system. Leakage inspection of the assembled manhole during the first wet season following construction is the best opportunity for verification that the manhole meets acceptable I/I criteria prior to being placed into service.
A final visual inspection for manhole leakage to confirm that as-built conditions have not degraded due to material failures, bedding or backfill settlement, or other causes needs to be performed at the end of the warranty period.

STANDARD

- Acceptance criteria following construction on new and rehabilitated manholes shall include a visual inspection to ensure that the manholes and connections to the manholes, as constructed, are watertight. Groundwater level shall be allowed to return to its normal elevation before performing the inspection. It is recommended that the visual inspection for manhole leakage be performed during the wet season when surrounding soils are fully saturated.

POTENTIAL LOCAL AGENCY IMPACTS

- Possible additional cost and additional staffing requirements for visual inspections.

POTENTIAL KING COUNTY IMPACTS

- Possible additional cost and additional staffing requirements for visual inspections.

POTENTIAL PRIVATE PROPERTY/RATEPAYER IMPACTS

- Potentially higher ratepayer costs for increased inspection requirements.

I/I CONTROL STANDARD TITLE: CCTV Inspection

STANDARD NO. PUB-17

I/I CONTROL MEASURE ISSUE:
Television inspection of newly installed and rehabilitated sewers provides documentation of lateral connections, confirms pipe joints are properly pushed home, and identifies infiltration and internal defects.

STANDARD

- A complete, televised inspection of sewer pipe shall be performed on newly installed and rehabilitated sewers. An audio-visual tape recording of the inspection, compatible with the Local Agency's existing audio-visual format, shall be retained by the Local Agency. A complete television inspection of newly installed and rehabilitated sewer laterals shall be performed where the lateral cannot be pressure tested. The CCTV inspection of the lateral shall include all portions of the lateral installed or rehabilitated on the project. If camera access through a lateral test wye cannot be provided, the video camera equipment shall have a separate side-casting camera that allows inspection of the lateral. The television inspection shall be conducted following trench backfill and compaction, cleaning and testing. Groundwater level shall be allowed to return to its normal elevation before performing the inspection.

POTENTIAL LOCAL AGENCY IMPACTS

- Additional camera equipment to inspect laterals may be required by agencies that perform their own CCTV inspection of new construction.
- Additional inspection time to examine lateral construction may be required for those agencies performing their own CCTV inspection of new construction.
- A slight increase in construction costs will result for agencies that currently do not require the contractor to perform the CCTV inspections of laterals.

POTENTIAL KING COUNTY IMPACTS

- No impact since King County normally performs CCTV inspection of new and rehabilitated mains and does not normally allow lateral connections to their trunk sewers.

POTENTIAL PRIVATE PROPERTY/RATEPAYER IMPACTS

- Television inspection of the lateral insures there are no internal defects, potentially reducing future private property owner maintenance requirements due to improper installation.
- Potentially higher ratepayer costs for increased CCTV inspection requirements.

I/I CONTROL STANDARD TITLE: Inspection of Pipe Installation and Backfill

STANDARD NO. PUB-18

I/I CONTROL MEASURE ISSUE:
Inspection of pipe and bedding materials; foundation conditions; and pipe laying, bedding and backfill operations is necessary to ensure conformance with the required standards. A visual inspection of connections to the new main line should be performed to verify that no disallowed connections, such as from storm water collection sources, are being made to the system. Without adequate inspection, contractors may take construction shortcuts that result in a substandard pipeline installation.

STANDARD

- The Local Agency shall perform the following inspection activities on pipeline installations:
  - Inspection of foundation conditions in areas of questionable soils to verify whether over-excavation is required.
  - Visual inspection of pipe materials and bedding and backfill materials for conformance with standards.
  - Measurement of compaction and density for conformance with bedding and backfill standards.
  - Visual inspection of pipe laying operations to ensure pipe has full, uniform support, pipe-jointing process is being properly performed, and compaction operations are not damaging the pipe.
  - Visual inspection of service connections to the mainline and manholes to verify no surface water collection sources are being connected to the sanitary sewer system.
- A minimum of 10% of the pipe length should be inspected as noted above. Above and beyond the minimum inspection, the Local Agency shall make the determination on the required frequency of the inspection based on the qualifications and quality of the contractor performing the work.

POTENTIAL LOCAL AGENCY IMPACTS

- Agency will need the inspection resources to adequately cover sewer construction work occurring within the agency.
- The following Local Agency inspection items should be performed for all pipeline installations:
  - Inspection of foundation conditions in areas of questionable soils to verify whether over-excavation is required.
  - Visual inspection of pipe materials and bedding and backfill materials for conformance with standards.
  - Conformance with compaction and density standards for bedding and backfill.
  - Visual inspection of pipe laying operations to ensure pipe has full, uniform support, pipe jointing process is being properly performed and compaction operations are not damaging the pipe.
  - Visual inspection of service connections to the mainline and manholes to verify no surface water collection sources are being connected to the sanitary sewer system.
- Administrative costs for on-site inspection will increase for those agencies that are not currently inspecting pipe installation and backfill operations.
- Inspection of pipe installation and backfill operations insures installation according to the standards, resulting in a more long-lasting and dependable facility. In the long-term, proper inspection of critical pipeline installation operations can save future maintenance, rehabilitation and replacement costs.

POTENTIAL KING COUNTY IMPACTS

- No impact. King County currently provides full time inspection on all construction projects.

POTENTIAL PRIVATE PROPERTY/RATEPAYER IMPACTS

- Potential higher ratepayer costs in those agencies where inspection is not currently being performed.

I/I CONTROL STANDARD TITLE: Product Specific Inspection

STANDARD NO. PUB-19

I/I CONTROL MEASURE ISSUE:
Products used in sewer system construction for both new and rehabilitation improvements can fail and lead to I/I due to improper installation and/or the use of non-specified products being installed. Without inspection, there are no assurances the product installed is the one specified and was installed properly.

STANDARD

- Product inspection is the visual verification of product test results and/or confirmation that an approved product is the one being installed, and the sequence of construction or application is appropriate. Verify the approved product is being installed in accordance with approved specifications. This includes pipe, fittings, bedding, and rehabilitation products. It is important to distinguish the difference between inspection and testing. Those products covered under the testing standard shall have those tests performed to verify compliance.
- Pipe shall be inspected at the point of installation to verify that it has factory markings identifying the type and class of pipe. Unlabeled products will not be approved for installation.
- Pipe fittings shall be inspected at the point of installation to confirm they meet the specifications.
- Pipe bedding material shall be inspected at the time of installation to be appropriate for the type of pipe (flexible or rigid).
- For rehabilitation products, the manufacturer's recommended installation procedure shall be reviewed prior to installation. An installation list with references shall be provided documenting recent projects where the product has been installed. Contact references and document the installation and operational experiences with the product. Conduct any additional investigations determined necessary for approval of the product and installation. If through this review the product appears acceptable, the installation requirements shall be documented from the review process along with any testing requirements of the installation.

POTENTIAL LOCAL AGENCY IMPACTS

- Added cost for increased inspection.
- Additional qualification investigation for proposed rehabilitation products.

POTENTIAL KING COUNTY IMPACTS

- No impact, since King County already doing full time inspection.

POTENTIAL PRIVATE PROPERTY/RATEPAYER IMPACTS

- Potentially higher ratepayer costs in agencies where product specific inspection is currently not being performed.

I/I CONTROL GUIDELINE TITLE: Certification, Warranty and Qualifications

GUIDELINE NO. PUB-20

I/I CONTROL MEASURE ISSUE:

Some new construction and/or rehabilitation products or application systems may not have a proven track record of performance, yet offer attractive benefits or low costs which merit their use. A product specific certification can be used to protect the Local Agency's investment.

Every construction or rehabilitation project requires a period within which defects in construction or materials should be allowed to become evident before the contractor, supplier or manufacturer ceases to have responsibility for the project. A stipulated warranty length can be used to protect the Local Agency's investment. Conventional construction products and methods should be warranted for a period of at least one year. Unconventional or newer products and methods could be warranted for a longer period, from 2 to 5 years, as determined by the Local Agency's Engineer.

A formal procedure for qualifying a manufacturer or contractor can be used to protect the Local Agency's investment. Qualifications information to be supplied during bidding may include a summary of the firm's history, itemization of a number of recent, similar projects with descriptions, amounts, names and experience of specific firm representatives, and names/phone numbers of owner references.

It is vital that the certification, warranty and qualification requirements and procedures be fully described in the contract documents to be enforceable with the contractors and suppliers.

GUIDELINE

- When a new construction and/or rehabilitation product or application system does not have a documented record of comparable prior successful installations, the supplier of the product or system shall be required to provide certification that the product or system will perform as specified.
- The certification shall provide for the complete replacement of the product or system by the contractor if the product or system is found to be defective when installed or applied by a certified agent of the manufacturer.
- Each new construction and/or rehabilitation project shall include a warranty period of at least one year. Longer periods may be stipulated as determined by the Local Agency based on the nature of the work.
- Testing requirements at the end of the warranty period shall be consistent with those used to determine initial project acceptance.
- The Local Agency may determine that specific qualifications for the manufacturer or contractor be included in the evaluation of bids received.

POTENTIAL LOCAL AGENCY IMPACTS

- Staff or consultant Engineer will need to spend time to research and develop a certification period as well as a means for determining compliance.
- Verification of certification requirements during the submittal process will be required.
- Inspection during construction to monitor installation/application will increase staffing requirements.
- Follow-up time by staff to monitor product or system performance may delay project completion and may increase staff requirements.
- Potential for additional project cost by manufacturer or contractor.
- Staff or consultant Engineer needs to determine appropriate qualification procedures.
- Staff or consultant Engineer needs to determine appropriate length of warranty period.
- Legal and engineering effort to establish acceptable pre-qualification requirements will be greater.
- Time needed to determine qualification information during bid evaluation period will be longer.

- There is potential for increased bid prices.
- Additional engineering and legal costs during design and bid periods are likely to occur.

POTENTIAL KING COUNTY IMPACTS

- Staff or consultant Engineer will need to spend time to research and develop a certification period as well as a means for determining compliance.
- Verification of certification requirements during the submittal process will be required.
- Inspection during construction to monitor installation/application will increase staffing requirements.
- Follow-up time by staff to monitor product or system performance may delay project completion and may increase staff requirements.
- Potential for additional project cost by manufacturer or contractor.
- Staff or consultant Engineer needs to determine appropriate qualification procedures.
- Staff or consultant Engineer needs to determine appropriate length of warranty period.
- Legal and engineering effort to establish acceptable pre-qualification requirements will be greater.
- Time needed to determine qualification information during bid evaluation period will be longer.
- There is potential for increased bid prices.
- Additional engineering and legal costs during design and bid periods are likely to occur.

POTENTIAL PRIVATE PROPERTY/RATEPAYER IMPACTS

- Potentially higher ratepayer costs for certifications and longer warranty periods.

I/I CONTROL GUIDELINE TITLE: Pipe Protection-Depth of Cover

GUIDELINE NO. PRV-1

I/I CONTROL MEASURE ISSUE:
Shallow buried flexible pipe is susceptible to damage from heavy live loads and construction loads. Deeply buried flexible pipe is susceptible to damage from heavy soil loading. Pipe type, class, and the quality of the pipe bedding installation are especially important for flexible pipe buried less than 3 feet deep and greater than 15 feet deep beneath a general fill. Standard industry practice based on load testing, engineering analysis and field experience is to maintain a minimum cover over flexible pipe of 3 feet to avoid damage from heavy live loads and construction loads. Burial depths greater than 15 feet create soil loading conditions that exceed the capacity of flexible pipe unless extremely careful attention is paid to pipe bedding installation.

GUIDELINE

- Depth of cover over flexible pipe shall be 3 feet minimum and 15 feet maximum. Where the depth of cover over a pipe is less than 3 feet or exceeds 15 feet, follow pipe manufacturer's recommendations for pipe material type and class, pipe installation procedures, bedding and backfill.
- Testing and inspection: Full time inspection of pipe bedding operation should be performed on flexible pipe installations over 15 feet.

POTENTIAL LOCAL AGENCY IMPACTS

- Inspection of bedding operations to ensure proper installation is especially critical for deeply buried flexible pipe.
- Inspection costs would go up for those agencies that are currently not continuously inspecting bedding placement for deeply buried flexible pipe.
- Review of supporting calculations would be required when flexible pipe is used for installations over 15 feet.

POTENTIAL KING COUNTY IMPACTS

- No impact since King County does not normally allow side sewer connections to its conveyance system.

POTENTIAL PRIVATE PROPERTY/RATEPAYER IMPACTS

- Construction costs for deeply buried pipe may increase moderately, thus increasing costs to ratepayers, in those agencies that presently allow installation of flexible side sewer pipe at depths over 15 feet without an engineering analysis.

I/I CONTROL STANDARD TITLE: Allowable Connections to Side Sewers

STANDARD NO. PRV-2

I/I CONTROL MEASURE ISSUE:
Description of allowable and disallowable connections to side sewers for the purpose of eliminating clean surface and subsurface drainage flow to the public separate sewer systems discharging to the King County regional conveyance system.

STANDARD

- Side sewers discharging to separated sewer systems shall convey sanitary sewage only. Sanitary sewage sources are limited to:
  - Building plumbing outlets.
  - Sump Pumps conveying sanitary sewage.
- Sources of clean water flow shall not be conveyed by side sewers discharging to a separate sewer system, including:
  - Downspouts.
  - Foundation drains.
  - Catch basins.
  - Storm water inlets and trench drains.
  - Structure or landscaping under-drain systems.
  - Sump pumps discharging surface runoff or subsurface drainage flow.

POTENTIAL LOCAL AGENCY IMPACTS

- Allowable connections to side sewers shall be in conformance with applicable plumbing codes.
- Newly developing building sites will be required to establish separate surface and sub surface drainage systems compatible with the developed site grading, soil conditions, groundwater table, and adjacent environmentally sensitive areas. Comprehensive monitoring for disallowable side sewer connections will be required, particularly where alternate disposal requirements for drainage are onerous to the property owner.
- It is expected that some existing building sites will be found to be discharging clean water to the side sewer, either as a result of partial failure of side sewers, or as a result of illicit connections. When implementing corrective measures for these sites, consideration must be given to disposition of the resulting displaced flows. New site drainage systems implemented for this purpose must be compatible with the developed site grading, soil conditions, groundwater table, and adjacent environmentally sensitive areas.
- Requirements for newly developing sites are consistent with most current development regulations and should not result in development costs above and beyond current requirements.
- Repair of failed side sewers will result in varying levels of cost on a per site basis. Incremental cost impacts will be associated with the following factors:
  - Side sewer length.
  - Site development features (i.e. structures, landscaping, pavement, etc.).
  - Site accessibility (i.e. slope, overgrowth, sensitive areas, etc.).
- Disconnection of clean water sources from side sewers on developed sites will result in varying levels of cost on a per site basis. Incremental cost impacts will be associated with the following factors:
  - Distance to alternative discharge point for clean water flows.
  - Presence of environmentally sensitive areas.
  - Relative elevation of property to alternative discharge point.
  - Ground water elevation.
  - Site elevation relative to surrounding areas.
  - Proportion of impermeable area on the site.

- Testing to determine the presence of failed side sewer conditions that might allow clean water to enter the system cannot be comprehensively achieved except during wet weather conditions that result in saturated ground conditions. Testing for this purpose is best achieved on a basin wide basis through flow monitoring and analysis, or potentially through television inspection.
- Testing for illicit downspout connections and certain area drain connections can be achieved, under favorable conditions, through smoke testing. Some illicit connections of surface or subsurface drainage will not be detected through smoke testing, but might be detectable using dye testing.
- Generally, basin wide testing for illicit connections is implemented prior to the implementation phase to determine where remedial actions may be required. Site specific testing during implementation of the remedial work may be helpful in determining the effectiveness and completeness of the work being undertaken.

POTENTIAL KING COUNTY IMPACTS

-

POTENTIAL PRIVATE PROPERTY/RATEPAYER IMPACTS

-

I/I CONTROL GUIDELINE TITLE: Pipe Zone Bedding and Trench Backfill

GUIDELINE NO. PRV-3

I/I CONTROL MEASURE ISSUE:
Side sewers not laid in granular bedding material are subject to potential point loading and/or deflection over time leading to subsequent damage to the pipe or pipe joint.

Guideline

- Side sewer/lateral pipe zone bedding material shall provide uniform support along the entire pipe barrel, without load concentration at joint collars or bells. Bedding material shall be granular material meeting the requirements of Standard Detail S-1. The installed pipe zone bedding material shall effectively separate the side sewer from contact with the native ground and any rocks, pebbles, roots, or other materials that might impose a point load on the side sewer. The pipe zone bedding material shall extend a minimum of 4 inches beyond the outside dimension of the side sewer pipe in all directions. All adjustments to line and grade shall be made by scraping away bedding material or filling with bedding material under the body of the pipe and not be accomplished by blocking or wedging. Disturbed bedding shall be reconsolidated prior to backfill. Pipe zone bedding material shall be compacted to 95 percent maximum density per ASTM D-1557. Bedding shall be placed, spread, and compacted before the pipe is installed so that the pipe is uniformly supported along the barrel. Material shall be worked carefully under and around the pipe haunches and then compacted.
- Deviation from the installation requirements noted above is acceptable where written recommendations have been provided by the pipe manufacturer.

Potential Local Agency Impacts

- Site inspection of side sewer bedding and backfill material and installation will be required to insure that requirements are met. Local Agency may be sewer agency or building department.
- Additional inspection and review time would be required for those Local Agencies not currently inspecting side sewer installations and reviewing material submittals.

Potential King County Impacts

- No impact, since King County does not allow side sewer connection to its conveyance system.

Potential Private Property/Ratepayer Impacts

- Potentially higher costs if builder/developer does not now use good practices in installing side sewers.
- Potentially higher permit costs for inspections and testing.

I/I CONTROL GUIDELINE TITLE: Pipe Materials

GUIDELINE NO. PRV-4

I/I CONTROL MEASURE ISSUE:
Pipe breakage and joint failures may occur because of improperly selected side sewer/lateral pipe materials and/or installation procedures, resulting in infiltration. Proper selection of pipe materials and joint systems is an important component of side sewer design and construction that will result in reduced immediate and future infiltration.

GUIDELINE

- Side sewer/lateral pipe materials shall be selected based on external loading and soil corrosion potential. Pipe materials used shall have strength characteristics consistent with the earth load and surcharge conditions anticipated. Vehicle live loads, overburden, soil characteristics, and slope conditions shall be considered. Side sewers shall be installed below the frost line and at a depth consistent with the published load bearing capacity of the pipe material used. Pipe materials used shall have corrosion resistant characteristics consistent with the corrositivity of the environment in which they are to be installed.
- Side sewer/lateral pipe materials shall employ gasketed joints and standard manufactured fittings designed for use with the pipe material installed. Deflection of joints shall be limited to 80% of the published maximum deflection for the gasketed joint. Flexible pipe materials used shall be properly bedded and backfilled to ensure that deflection of the pipe beyond its structural capacity will not occur and that deflection "out of round" beyond the capability of the pipe joints to remain sealed does not occur.
- Connection between the side sewer/lateral and dissimilar building plumbing piping shall be accomplished using approved flexible water tight couplings specifically designed for the pipe materials joined. Butt joints wrapped and/or encased in concrete or mortar joint will not be allowed. Connection of pressure discharges from building plumbing to gravity side sewers/laterals shall be accomplished using standard pressure fittings and shall be anchored to ensure against movement during pressurization cycles.

POTENTIAL LOCAL AGENCY IMPACTS

- Site inspection of side sewer/lateral material and joint installation insuring requirements are met. Local Agency may be sewer agency or building department.
- Additional inspection and review time would be required for those Local Agencies not currently inspecting side sewer installations and reviewing material submittals.
- Integrity of the installed pipe material and joints must be determined through water, air, or vacuum testing (see testing standards). Testing to confirm integrity of side sewers/laterals should be required prior to acceptance of the installation following construction and following a one-year warranty period.

POTENTIAL KING COUNTY IMPACTS

- No impact, since King County does not normally allow side sewer connection to its conveyance system.

POTENTIAL PRIVATE PROPERTY/RATEPAYER IMPACTS

- May be added costs to property owner/developers if their practices change due to standards for pipe material and joint systems being more strictly enforced.

I/I CONTROL STANDARD TITLE: Inspection Wyes/Cleanouts

STANDARD NO. PRV-5

I/I CONTROL MEASURE ISSUE:
Pipe breakage and joint failures may occur during the service life of a side sewer pipe, resulting in infiltration. Installation of inspection wyes/cleanouts at the upstream end of the side sewer allows for the future preparation and inspection of side sewer to identify infiltration problems and their specific sources.

STANDARD

- An inspection wye/cleanout shall be installed in each new and rehabilitated side sewer immediately down stream of the connection between the building plumbing outlet and the side sewer per Standard Detail SS-1. The inspection wye/cleanout shall meet the requirements of Standard Detail SS-4. Inspection wyes/cleanouts shall be installed no less than 2 feet and no more than 5 feet beyond the face of the building for new side sewer installations. For rehabilitation projects, the inspection wye/cleanout shall be located within 2 feet of the termination of the rehabilitation. Inspection wyes/cleanouts shall be located, to the greatest extent possible, to ensure CCTV accessibility in the future throughout the entire side sewer.
- When any work is done to rehabilitate a side sewer that involves excavating to expose and gain entry to the pipe outside of an existing inspection wye/cleanout, the entire side sewer from the property line to the building(s) must be upgraded to meet this standard.
- Connection of inspection wye/cleanout assemblies to the existing pipe system shall be made with an approved rubber gasketed pipe coupling.

POTENTIAL LOCAL AGENCY IMPACTS

- Inspection of inspection wye/cleanout installations to ensure that requirements are met. Local Agency may be sewer agency or building department. Documentation and record keeping to facilitate future location and use of the inspection wyes/cleanouts.
- Property access issues allowing use of inspection wyes/cleanouts by the Local Agency and/or the sewer agency to assess condition of the side sewer/lateral in the future. May require side sewer permit/utility ordinance clause modifications.
- Additional administrative costs to initially record and maintain records of inspection wye/cleanout locations.
- Additional costs associated with permit language and/or ordinance modifications required to establish legal right for Local Agency to access inspection wyes/cleanouts on private property.
- Additional cost associated with ongoing program of periodic monitoring of side sewer integrity and performance using the inspection wyes/cleanouts.
- Inspection wye/cleanout testing will be accomplished integrally with the side sewer/lateral test.

POTENTIAL KING COUNTY IMPACTS

- No impact, since King County does not normally allow side sewer connections to its conveyance system.

POTENTIAL PRIVATE PROPERTY/RATEPAYER IMPACTS

- Increased costs for added fittings and installation requirements, as well as inspections where standard requirements exceed current requirements
- Restrictions on development and landscaping required to maintain accessibility to inspection wye/cleanout in the future.

I/I CONTROL GUIDELINE TITLE: Lateral and Side Sewer Rehabilitation Methods

GUIDELINE NO. PRV-6

I/I CONTROL MEASURE ISSUE:
Once the decision has been made to rehabilitate laterals or side sewers to control I/I, several alternatives may be used to replace or rehabilitate the pipe. These include trenchless rehabilitation techniques such as cure-in-place lining, pipe bursting and conventional dig and replace. An evaluation should be made to determine suitability (technical and cost effectiveness) of trenchless methods versus conventional dig and replacement of the sewer. The technical evaluation should assess specific issues such as the sewer location and length, alignment, condition of the pipe being replaced, assessment of the surface features that would be disturbed by construction, and the degree of root intrusion in the existing lines. The alternative pipe rehabilitation methods that should be considered include:

Pipe bursting is a trenchless pipeline rehabilitation method that can be used to replace side sewer pipes. Reduction of excess flow is achieved by eliminating sources of infiltration in the piping being replaced. Illicit connections are eliminated by removing the connection to the side sewer. It is possible to increase the size of the pipe; however, site specific constraints may limit the ability to increase the size. Using pipe bursting to replace a pipe may be restricted depending upon adjacent utilities, proximity to surface improvements, the type of existing pipe being replaced, and soil conditions. There are a number of variations on pipe bursting, such as pneumatic, hydraulic expansion, and static pull systems. All of these displace the old pipe into the adjacent ground and pull a new pipe in to replace the old pipe. There are also related processes such as pipe reaming, which is a variation of horizontal directional drilling, where pieces of the old pipe are removed rather than pushing them into the adjacent soil. The most common pipe material used is HDPE, but other types of pipe material such as cast iron, MDPE, and ABS can be used for the replacement pipe. Pipe bursting of side sewers will require excavation of at least two pits for insertion and pulling. Generally, pipe bursting is suitable for straight sections. If there are buried bends on the side sewer it may require additional pits to be excavated for installation of the replacement pipe.

Cure-in-place pipe (CIPP) liner is a trenchless pipeline rehabilitation method that can be used to repair existing side sewer pipes. Reduction of excess flow is achieved by eliminating sources of infiltration in the piping being rehabilitated. CIPP liner involves inverting an epoxy-resin-impregnated flexible tube into an existing line using hydrostatic head. The resin is then cured using heat to produce a pipe inside the existing side sewer. The outside diameter of the replacement pipe is smaller than the existing pipe to allow the system to be installed. Capacity in the pipeline will be reduced because of the reduction in pipe size.

Fold and form lining is a trenchless pipeline rehabilitation method that can be used to repair existing side sewer pipes. Reduction of excess flow is achieved by eliminating sources of infiltration in the piping being replaced. The fold-and-form process involves inserting a heated PVC or HDPE thermoplastic liner, folded or deformed into a U-shape, into an existing side sewer and re-rounding the liner using heat and pressure to produce a pipe inside the existing pipe. The outside diameter of the replacement pipe is smaller than the existing pipe to allow the system to be installed. Capacity in the pipeline will be reduced because of the reduction in pipe size.

GUIDELINE

- Construction standards for pipe bursting, cure-in-place lining and folded and formed liners shall be as follows:
- Pipe Bursting:
  - Pipe bursting shall meet the requirements of the King County Regional Inflow and Infiltration Control Program Guide Specifications.
- Cure-in-Place Lining:

- Cure-in-place-lining shall meet the requirements of the King County Regional Inflow and Infiltration Control Program Guide Specifications.

- Fold and Form:
  - Fold and form-lining shall meet the requirements of the King County Regional Inflow and Infiltration Control Program Guide Specifications.
- Testing and Inspection:
  - The rehabilitated side sewer/lateral from the inspection wye/cleanout at the building foundation to the main side sewer/lateral pipeline shall be tested in accordance with the I/I Side Sewer/Lateral Leak Testing Standard, and shall be television inspected in accordance with the I/I CCTV Inspection Standard after completion of the repairs and backfilling of the pipe trench.

POTENTIAL LOCAL AGENCY IMPACTS

- Added cost to perform inspection and testing.

POTENTIAL KING COUNTY IMPACTS

- No impact, since King County does not normally allow side sewer connections to its conveyance system.

POTENTIAL PRIVATE PROPERTY/RATEPAYER IMPACTS

- Added cost for inspection and testing of private sewer lines.

I/I CONTROL STANDARD TITLE: Spot Repairs

STANDARD NO. PRV-7

I/I CONTROL MEASURE ISSUE:
Private side sewer spot repairs are repairs to specific deficiencies in a side sewer pipe, such as a specific leaking pipe joint. These repairs can be a cost effective way to eliminate I/I in sections (generally cleanout-to-cleanout that show damage) of a side sewer that are sound except for a few point locations. Only those specific deficiencies in the side sewer are repaired. In sections with numerous spot problems or with other mitigating factors such as age, the entire side sewer is a candidate for complete rehabilitation or replacement.

STANDARD

- As a precursor to doing spot repairs, the Local Agency shall assess the age and material of the side sewer to determine if it should be completely replaced rather that allow spot repairs. If a side sewer is over 50 years old, it shall be completely rehabilitated or replaced from the building to the public right-of-way.
- Spot repairs can be accomplished by several different methods from trenchless systems like CIPP liners, injecting epoxy resins, or chemical grout, to dig and repair with structural grouting sleeves or short sections of pipe replacement. The repair method shall address whether the defect is structural or limited to an intact leaky joint.
- For a dig and replace spot repair, the section of the side sewer shall be removed to the nearest joint and replaced with new pipe meeting the requirements of the I/I Pipe Materials Standard. The new section of pipe shall be installed with approved repair couplings.
- Trenchless spot repairs shall meet the I/I standard for the particular rehabilitation method used.
- Inspection wye/cleanouts shall be installed on the side sewer per Standard Detail SS-1as part of the spot repair.

POTENTIAL LOCAL AGENCY IMPACTS

- Cost of installing the inspection wye/cleanout on public right-of-way if none exists.

POTENTIAL KING COUNTY IMPACTS

- No impact, since King County does not normally allow side sewer connection to its conveyance system.

POTENTIAL PRIVATE PROPERTY/RATEPAYER IMPACTS

- Added cost will be incurred if no inspection wye/cleanout exists in the system.

I/I CONTROL STANDARD TITLE: Root Intrusion

STANDARD NO. PRV-8

I/I CONTROL MEASURE ISSUE:
Side sewers that have roots protruding in the pipe have a breach in the piping system either at a joint and/or a break in the pipe. This breach is a potential source for infiltration.

STANDARD

- For any sewer system rehabilitation work on side sewers or laterals that utilizes public resources, root intrusion shall be addressed by evaluating removal of the roots and repair or replacement of the side sewer/lateral at the point of root intrusion.

POTENTIAL LOCAL AGENCY IMPACTS

- The costs of pipe repair will be incurred if the rehabilitation is financed by the agency.

POTENTIAL KING COUNTY IMPACTS

- No impact, since King County is not responsible for side sewers.

POTENTIAL PRIVATE PROPERTY/RATEPAYER IMPACTS

- Pipe repair activities may cause inconveniences from service disruptions or construction activities.
- The cost of rehabilitation will be incurred if financed by the property owner.

I/I CONTROL STANDARD TITLE: Side Sewer/Lateral Leak Testing

STANDARD NO. PRV-9

I/I CONTROL MEASURE ISSUE:
Several aspects of side sewer/lateral pipe installation, if not properly designed and constructed, may result in infiltration entering the finished pipeline. Leakage testing of the assembled side sewer/lateral immediately following construction is the final opportunity for verification that the pipeline meets acceptable I/I criteria prior to being placed into service.

It is also beneficial to test side sewer/lateral pipelines after a significant period of service to confirm that as-built conditions have not degraded due to material failures, bedding or backfill settlement, or other causes.

STANDARD

- Acceptance criteria following construction shall include testing requirements to ensure that the side sewer/laterals and connections of new and rehabilitated side sewers/laterals, as constructed, meet specified leakage limitations. All new side sewer/laterals shall be tested by either a water test or a low pressure air test.
- The water test shall be an infiltration test if the side sewer/lateral is installed below the groundwater level. The water test shall be an exfiltration test if the side sewer/lateral is installed above the groundwater level. Testing shall be in conformance with WSDOT/APWA Standard Specifications. The downstream end of the private side sewer/lateral shall be plugged to isolate the private side sewer/lateral from the public side sewer/lateral stub and the building plumbing when water testing methods are employed.
- Low pressure air testing shall conform to the requirements of the WSDOT/APWA Standard Specifications. The downstream end of the private side sewer/lateral shall be plugged to isolate the private side sewer/lateral from the public side sewer/lateral stub and the building plumbing when low-pressure air testing methods are employed.
- Where a rehabilitated lateral/side sewer cannot be water tested or low pressure air tested, the pipeline shall be CCTV inspected for leakage at its connection point to the sewer main. The inspection for leakage shall be performed during the wet season when surrounding soils are fully saturated.
- On publicly funded rehabilitation projects, additional testing at the completion of the warranty period to establish the continued integrity of the side sewer/lateral shall be required. Since water testing or low-pressure air testing of side sewer/laterals after they have been put into service is problematic, visual inspection using CCTV shall be conducted as the most effective practical testing method available for confirming that warranty requirements have been met.

POTENTIAL LOCAL AGENCY IMPACTS

- Possible additional cost and additional staffing requirements for acceptance and warranty testing verification.
- Possible additional construction cost to account for acceptance and warranty testing requirements.
- Potential additional cost for agency to conduct Video Inspection and./or review Video Inspection tapes at the end of the warranty period.

POTENTIAL KING COUNTY IMPACTS

- No impact since King County does not normally allow side sewer connections to its conveyance system.

POTENTIAL PRIVATE PROPERTY/RATEPAYER IMPACTS

- Increased permit costs for added testing requirements, as well as inspections, where standard requirements exceed current requirements.

I/I CONTROL GUIDELINE TITLE: Sanitary Side Sewer Inspection

GUIDELINE NO. PRV-10

I/I CONTROL MEASURE ISSUE:
A visual inspection of the private side sewer is needed before it is backfilled or covered to ensure that pipe materials meet specifications, the pipe is properly supported, and that storm water drains and subsoil drains are not connected to the sanitary sewer.

GUIDELINE

- No trench shall be filled nor any side sewer covered until the work has been inspected, tested and approved by the Local Agency. The Local Agency may require that any work covered be uncovered, or tested by a recognized independent testing laboratory (at the expense of the permittee), to ensure that the work has been accomplished in accordance with the permit.

POTENTIAL LOCAL AGENCY IMPACTS

- Inspection standards for private side sewers would need to include a provision for a visual inspection of each side sewer before it is backfilled or covered. Additional inspection effort would be required for those agencies not currently inspecting each side sewer. Local Agency inspection forms should include verification of the visual inspection including date, time and the name of the inspector.
- Tighter coordination of inspection timing may be required.
- Additional inspection time would be required for those agencies not currently inspecting each side sewer.

POTENTIAL KING COUNTY IMPACTS

- No impact since King County does not normally allow side sewer connections to its conveyance system.

POTENTIAL PRIVATE PROPERTY/RATEPAYER IMPACTS

- Permit fees for side sewer installation could increase for Local Agency to finance inspection costs.

I/I CONTROL STANDARD TITLE: Sanitary Side Sewer CCTV Requirements

STANDARD NO. PRV-11

I/I CONTROL MEASURE ISSUE:
Television inspection of newly installed and rehabilitated side sewers provides documentation of connections, confirms pipe joints are properly pushed home, and identifies infiltration defects and inflow sources.

Standard

- A televised inspection of the connection of new and rehabilitated lateral/side sewers to the sewer main shall be performed where the lateral/side sewer cannot be pressure tested. An audio-visual tape recording of the inspection, compatible with the Local Agency's existing audio-visual format, shall be retained by the Local Agency. The television inspection shall be conducted following trench backfill and compaction, cleaning and testing. If dewatering was required for side sewer installation, the groundwater level shall be allowed to return to its normal elevation before performing the inspection.

Potential Local Agency Impacts

- Additional inspection time to CCTV the lateral/side sewer and connection would be required for those agencies performing their own CCTV inspections.
- Equipment costs for new CCTV camera equipment capable of inspecting lateral/side sewers may be required.
- An increase in lateral/side sewers costs will result for agencies that do not currently require the contractor to perform CCTV inspections.

Potential King County Impacts

- No impact since King County does not normally allow side sewer connections to its conveyance system.

Potential Property Owner/Ratepayer Impacts

- CCTV inspection requirements will increase the total cost of lateral/side sewer installations.

I/I CONTROL STANDARD TITLE: Product Specific Inspection

STANDARD NO. PRV-12

I/I CONTROL MEASURE ISSUE:
Side sewer system products in both new and rehabilitation improvements can fail and lead to I/I due to improper installation and/or non-specified products being installed. Without inspection, there are no assurances the product installed is the one specified and was installed properly.

Standard

- Product inspection is the visual verification of product test results and/or confirmation that an approved product is the one being installed, and the sequence of construction or application is appropriate. All products being installed shall be inspected to verify the approved product is being installed in accordance with approved specifications. This includes pipe, fittings, bedding, and rehabilitation products. It is important to distinguish the difference between inspection and testing. Those products covered under the testing standard shall have those tests performed to verify compliance.
- Pipe shall be inspected at the point of installation to verify that it has factory markings identifying the type and class of pipe. Unlabeled products will not be approved for installation.
- Pipe fittings shall be inspected at the point of installation to confirm they meet the specifications.
- Pipe bedding material shall be inspected at the time of installation to confirm the material is appropriate for the type of pipe (flexible or rigid).
- For rehabilitation products, the manufacturer's recommended installation procedure shall be reviewed prior to installation. An installation list with references shall be provided documenting recent projects where the product has been installed recently. The Local Agency shall contact references and document the installation and operational experiences with the product, and conduct any additional investigations determined necessary for approval of the product and installation. If through this review the product appears acceptable, the installation requirements shall be documented from the review process along with any testing requirements of the installation.

Potential Local Agency Impacts

- Added cost for increased inspection.
- Additional qualification investigation for proposed rehabilitation products.

Potential King County Impacts

- No impact since King County does not normally allow side sewer connections to its conveyance system.

Potential Private Property/Ratepayer Impacts

- Potential for increased inspection costs.
- Possible extension of construction schedule to accommodate inspection requirements.

I/I CONTROL STANDARD TITLE: Product Specific Certification

STANDARD NO. PRV-13

I/I CONTROL MEASURE ISSUE:
Some new construction and/or rehabilitation products or application systems may not have a proven track record of performance, yet offer attractive benefits or low costs which merit their use. The contractor installing the product must also be approved by the supplier as qualified to perform the work. A product specific certification can be used to protect the property owner's investment and the Local Agency's long-term interest.

STANDARD

- When a new construction and/or rehabilitation product or application system does not have a documented record of comparable prior successful installations, the supplier of the product or system shall be required through the building or sewer connection permit process to provide certification that the product or system will perform as specified.
- The contractor installing the rehabilitation product shall be certified by the product manufacturer as being qualified to apply/install the product.
- The certification shall provide for the complete replacement of the product or system by the contractor if the product or system is found to be defective.

POTENTIAL LOCAL AGENCY IMPACTS

- Staff or consultant Engineer will need to spend time to research and develop a certification period as well as a means for determining compliance.
- Inspection during construction to monitor installation/application will increase staffing requirements.
- Follow-up time by staff to monitor product or system performance may delay project completion and may increase staff requirements.
- Potential for additional project cost by manufacturer or contractor.
- Additional engineering cost during design, construction and follow-up will likely be incurred.

POTENTIAL KING COUNTY IMPACTS

- No impact since King County does not normally allow side sewer connections to its collection system.

POTENTIAL PRIVATE PROPERTY/RATEPAYER IMPACTS

- Potentially higher side sewer construction costs for certifications.

I/I CONTROL STANDARD TITLE: Bonding and Warranty Inspection

STANDARD NO. PRV-14

I/I CONTROL MEASURE ISSUE:
One critical element of a warranty is verification of the improvement prior to the end of the warranty period so that construction deficiencies can be accomplished and paid for via the performance bond. Thus the system can be repaired and I/I eliminated.

STANDARD

- A warranty period shall be established on publicly funded projects for each side sewer project, or for each project containing a side sewer construction component. This warranty period shall be a minimum of one year in length.
- All side sewer pipes shall be CCTV inspected after 80% of the warranty period has expired but before the end of the warranty period. Defective portions of the system shall be repaired to meet all applicable I/I standards.
- A written record shall be made by the agency of acceptance of the improvement with the date and results of the inspections and testing. This shall be submitted to Contracting Agency for concurrence prior to release of the performance bond.

POTENTIAL LOCAL AGENCY IMPACTS

- Additional CCTV inspection and enforcement of the warranty.

POTENTIAL KING COUNTY IMPACTS

- Processing time for concurrence to release performance bond.

POTENTIAL PRIVATE PROPERTY/RATEPAYER IMPACTS

- Potential of added costs for inspections and verifications.
- Possible schedule delay to allow for verifications.

MWPAAC Engineering & Planning Subcommittee

FINAL DRAFT

Standard Details

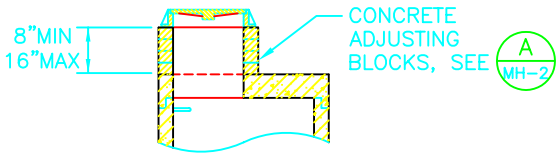

TYPICAL REDUCING SLAB A --
SCALE: NTS

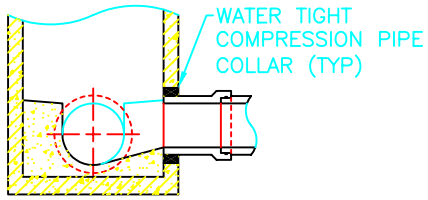

PIPE PENETRATION DETAIL 1 --
SCALE: NTS

NOTES:

1. JOINT BETWEEN PRECAST RISER AND CAST IN PLACE BASE SLAB SHALL BE WATERTIGHT. SEE D --

2. JOINT BETWEEN PRECAST RISER AND PRECAST BASE SHALL BE GASKETED. SEE E --

3. PATCH ALL LIFTING HOLES TO PROVIDE WATERTIGHT SEAL.

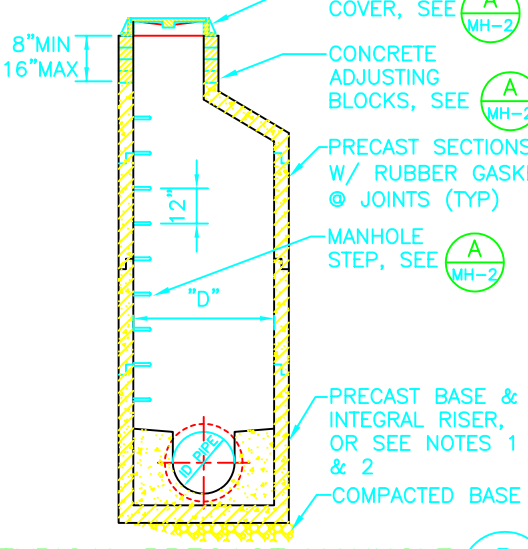

TYPICAL PRECAST MANHOLE B --
SCALE: NTS

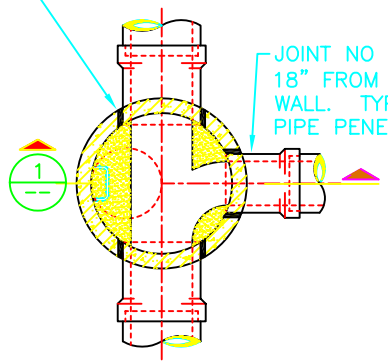

TYPICAL CONNECTION DETAIL C --
SCALE: NTS

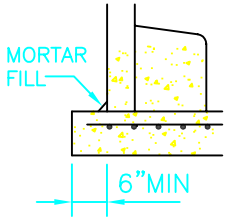

CAST IN PLACE BASE JOINT D --
SCALE: NTS

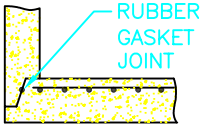

PRECAST BASE JOINT E --
SCALE: NTS

THIS STANDARD ADDRESSES SPECIFIC FEATURES IMPACTING I/I CONTROL. SEE STANDARD DETAILS PUBLISHED BY ADMINISTRATIVE AUTHORITY FOR COMPLETE DESIGN REQUIREMENTS

Regional Infiltration/Inflow Control Program	DRAFT	STANDARD I/I CONTROL FEATURES MANHOLES – NEW CONSTRUCTION	DATE: SEP 04 / DRAWN: TSM / DWG NO: **MH-1**

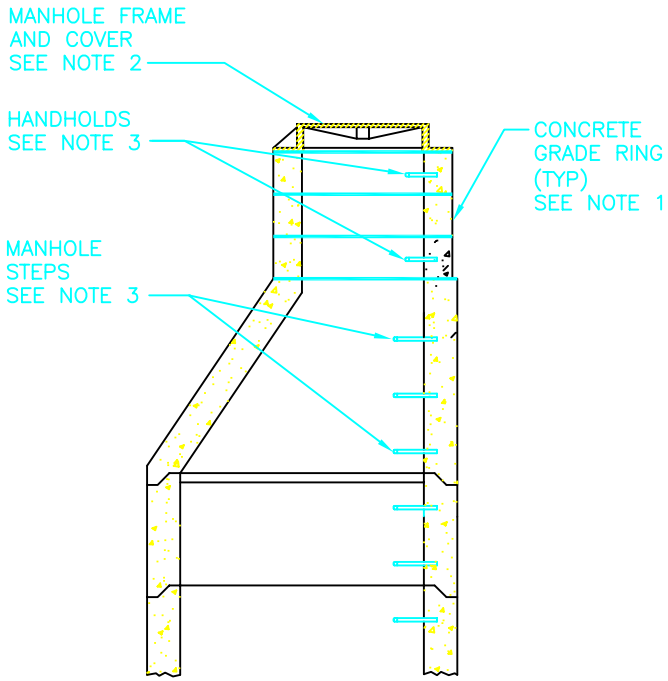

GRADE RINGS, STEPS AND ANCHORS (A / --)

SCALE: NTS

NOTES:

1. INSTALL CONCRETE GRADE RINGS OF VARIABLE HEIGHT TO ALIGN MANHOLE FRAME AND COVER AT ELEVATION OF PAVEMENT SURFACE ABOVE PRECAST MANHOLE SEGMENTS.

2. LEVELING OF MANHOLE FRAME TO MATCH PAVEMENT SLOPE SHALL BE ACCOMPLISHED THROUGH A SINGLE COURSE OF NONSHRINK GROUT ABOVE THE UPPER CONCRETE GRADE RING AND SHALL MATCH THE FULL WIDTH OF THE GRADE RINGS. SOLID, GASKETED COVERS WITH WATERTIGHT SEAL SHALL BE USED WHEN MANHOLE RIM IS SUBJECT TO SURFACE WATER FLOW OR PONDING.

3. MANHOLE STEPS, HANDHOLES, AND OTHER ANCHOR BOLTS SHALL BE EMBEDDED IN PRECAST UNITS OR INSTALLED WITH CONCRETE ANCHORS. NO STEPS, HANDHOLDS OR ANCHORS SHALL PENETRATE THROUGH THE MANHOLE WALL.

THIS STANDARD ADDRESSES SPECIFIC FEATURES IMPACTING I/I CONTROL. SEE STANDARD DETAILS PUBLISHED BY ADMINISTRATIVE AUTHORITY FOR COMPLETE DESIGN REQUIREMENTS

Regional Infiltration/Inflow Control Program	DRAFT STANDARD I/I CONTROL FEATURES MANHOLES – GRADE RINGS AND STEPS	DATE: SEP 04	DRAWN: TSM
		DWG NO: **MH-2**	

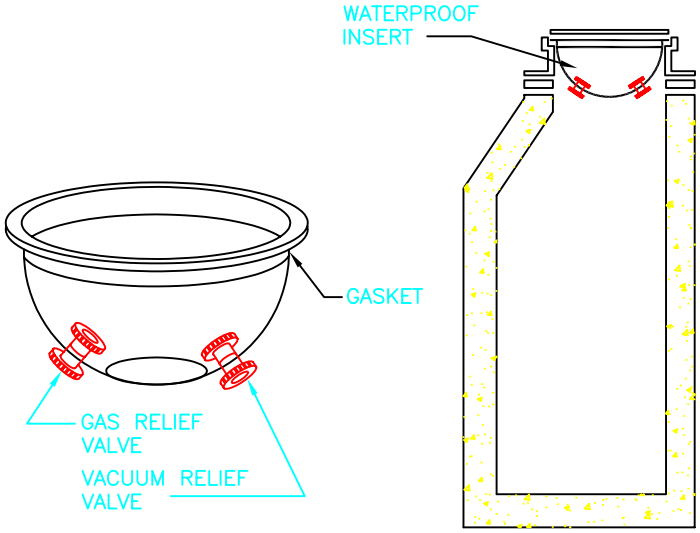

MANHOLE COVER INSERT

SCALE: NTS

A
--

NOTES:

1. THE INSERT SHALL BE DEEP ENOUGH TO PREVENT THE MANHOLE COVER FROM COMING IN CONTACT WITH THE VALVES WHEN THE MANHOLE COVER IS REMOVED OR INSTALLED.
2. THE INSERT WILL RESTRICT FLOW TO NO MORE THAN 1 GALLON IN 24 HOURS.
3. THE MANHOLE INSERT WILL BE MADE OF NON-CORRODABLE MATERIALS THAT WILL NOT BE DAMAGED BY SEWER GASES OR ROAD OIL.
4. THE GAS RELIEF VALVE AND THE VACUUM RELIEF SHALL BE SELF CLEANING AND BE MADE OF NON-CORRODABLE MATERIALS.
5. THE GAS RELIEF VALVE WILL BE AUTOMATICALLY ACTIVATED AT A PRESSURE DIFFERENTIAL OF APPROX. 2.25 PSI.
6. THE VACUUM RELIEF VALVE WILL BE AUTOMATICALLY ACTIVATED AT A PRESSURE DIFFERENTIAL OF APPROX. 2.25 PSI.
7. A GASKET SHALL BE INSTALLED UNDER THE LIP OF THE INSERT TO INSURE A TIGHT SEAL BETWEEN THE INSERT AND THE MANHOLE FRAME.
8. INSERTS NOT APPROPRIATE FOR USE ON MANHOLES WITH LOCKING COVERS.

THIS STANDARD ADDRESSES SPECIFIC FEATURES IMPACTING I/I CONTROL. SEE STANDARD DETAILS PUBLISHED BY ADMINISTRATIVE AUTHORITY FOR COMPLETE DESIGN REQUIREMENTS

Regional Infiltration/Inflow Control Program	DRAFT STANDARD I/I CONTROL FEATURES MANHOLE COVER INSERT	DATE: SEP 04	DRAWN: TSM
		DWG NO: **MH-3**	

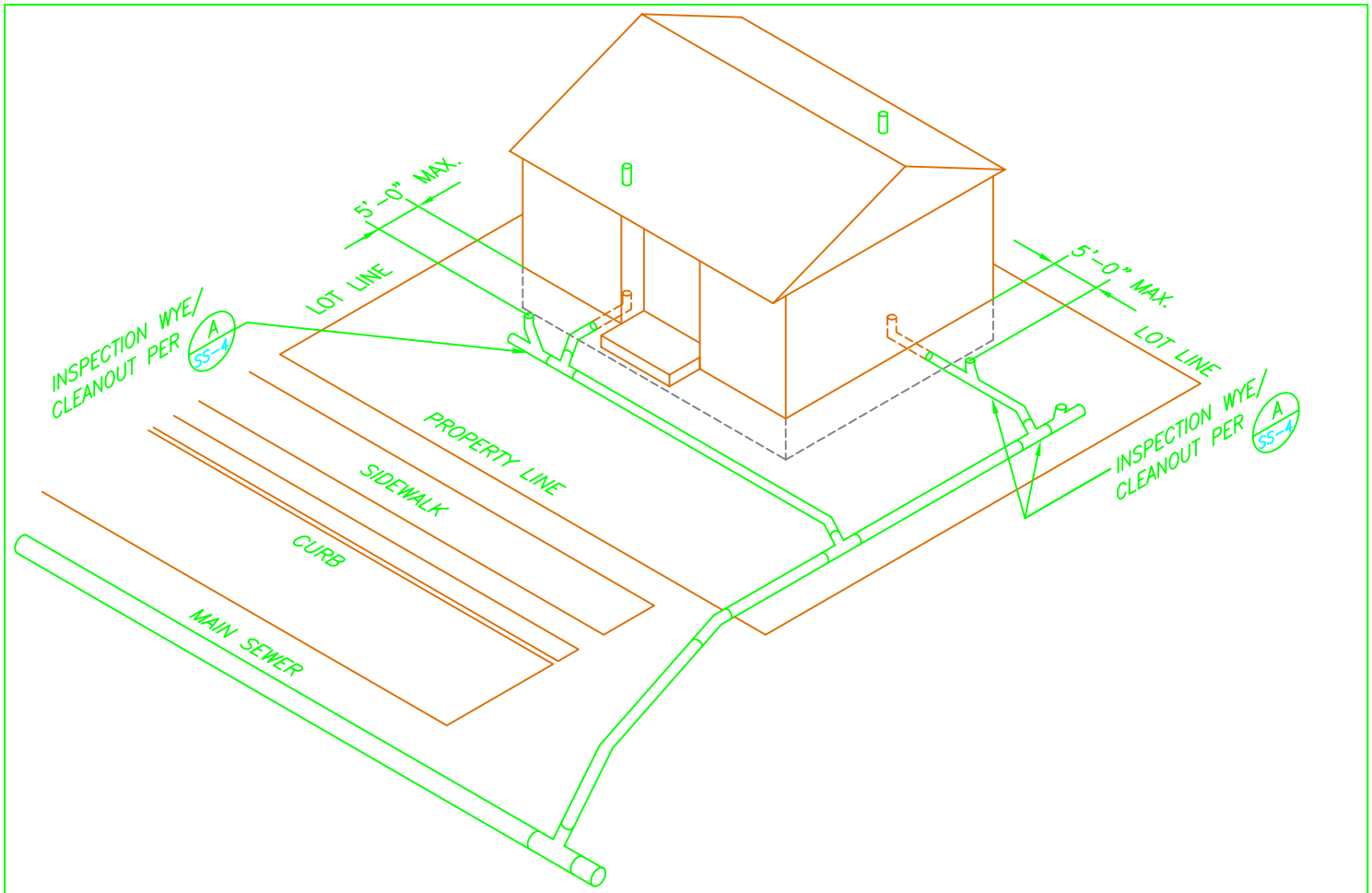

Regional Infiltration/Inflow Control Program	DRAFT STANDARD I/I CONTROL FEATURES SIDE SEWER INSTALLATION	DATE: SEP 04	DRAWN: TSM
		DWG NO: **SS-1**	

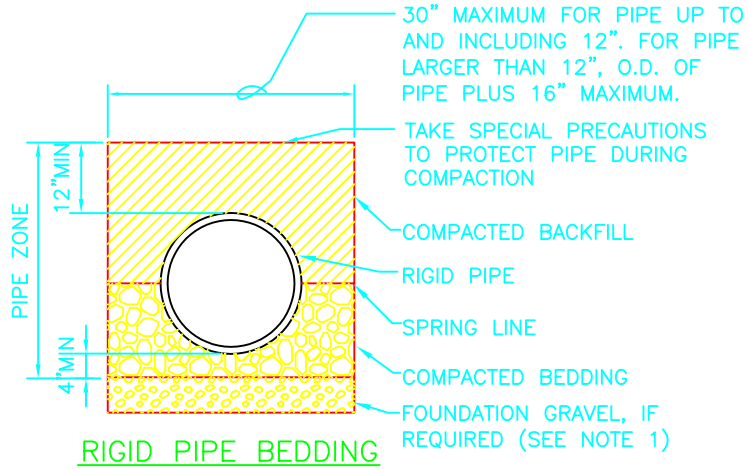

RIGID PIPE BEDDING

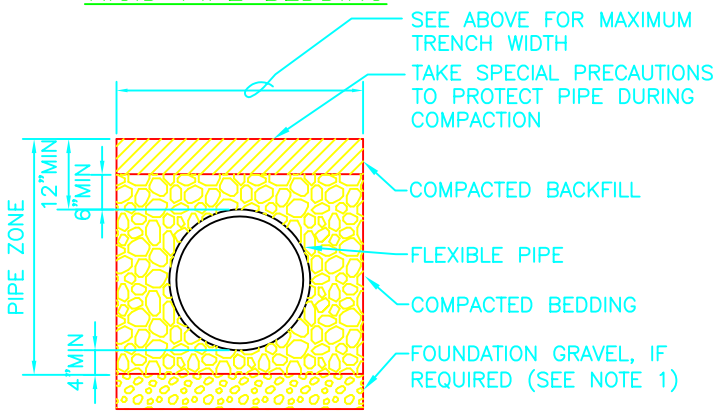

FLEXIBLE PIPE BEDDING

PIPE BEDDING

SCALE: NTS

A

--

NOTES:

1. EXCAVATE UNSTABLE MATERIAL DOWN TO FIRM SOIL AS DIRECTED BY THE ADMINISTRATIVE AUTHORITY AND REPLACE WITH FOUNDATION MATERIAL PER WSDOT/APWA SECTION 9-03.17 (FOUNDATION MATERIAL CLASS A)

ALLOWABLE BEDDING MATERIALS *	
RIGID PIPE	FLEXIBLE PIPE
CRUSHED SURFACING TOP COURSE, SECTION 9-03.9 (3)	BEDDING MATERIAL FOR THERMO-PLASTIC PIPE, SECTION 9-03.16
GRAVEL BACKFILL FOR PIPE ZONE BEDDING, SECTION 9-03.12(3)	CRUSHED SURFACING TOP COURSE, SECTION 9-03.9(3)
* BEDDING MATERIAL REQUIREMENTS PER WSDOT/APWA STANDARD SPECIFICATIONS.	

"THIS STANDARD ADDRESSES SPECIFIC FEATURES IMPACTING I/I CONTROL. SEE STANDARD DETAILS PUBLISHED BY ADMINISTRATIVE AUTHORITY FOR COMPLETE DESIGN REQUIREMENTS"

Regional Infiltration/Inflow Control Program	DRAFT	STANDARD I/I CONTROL FEATURES SEWER – PIPE ZONE BEDDING	DATE: SEP 04 DRAWN: JKL DWG NO: **S-1**

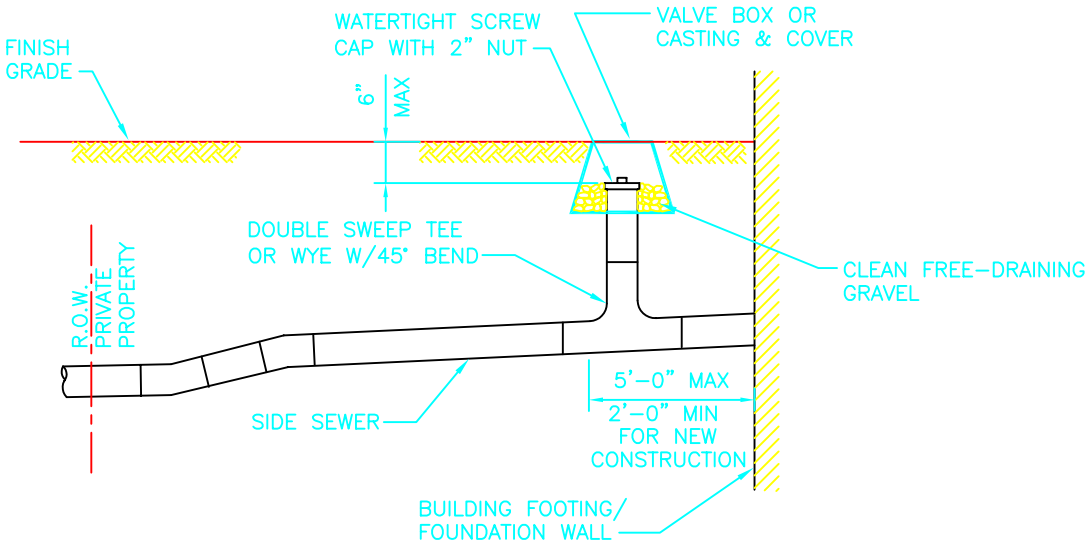

SECTION

SIDE SEWER INSPECTION WYE/CLEANOUT

A
--

NOTES:

1. NO DOWNSPOUTS OR STORM DRAINAGE SHALL BE CONNECTED TO THE SANITARY SYSTEM.
2. AS-BUILTS DRAWING SHOWING LOCATION OF SIDE SEWER AND INSPECTION WYE/CLEANOUT IN RELATION TO THE HOUSE AND EXISTING UTILITIES IS REQUIRED AFTER INSTALLATION.
3. A CLEANOUT MAY BE HELD BELOW GRADE IN UNPAVED AREAS A MAXIMUM OF 6". PROVIDE AN 8"x8"x1/4" GALVANIZED STEEL PLATE OVER THE TOP OF BURRIED CLEANOUTS FOR FUTURE LOCATING.
4. IF INSPECTION WYE/CLEANOUT IS WITHIN DRIVING SURFACE, EXTEND CLEANOUT TO GRADE AND PROVIDE AN HS-20 RATED LOAD-BEARING CASTING AND COVER.
5. FOR SIDE SEWER REHABILITATION PROJECTS, LOCATE INSPECTION WYE/CLEANOUT WITHIN 2 FEET OF THE TERMINATION OF THE REHABILITATED PIPE.

THIS STANDARD ADDRESSES SPECIFIC FEATURES IMPACTING I/I CONTROL. SEE STANDARD DETAILS PUBLISHED BY ADMINISTRATIVE AUTHORITY FOR COMPLETE DESIGN REQUIREMENTS

Regional Infiltration/Inflow Control Program	DRAFT STANDARD I/I CONTROL FEATURES SIDE SEWER INSPECTION WYE/CLEANOUT	DATE: SEP 04	DRAWN: TSM
		DWG NO: **SS-2**	

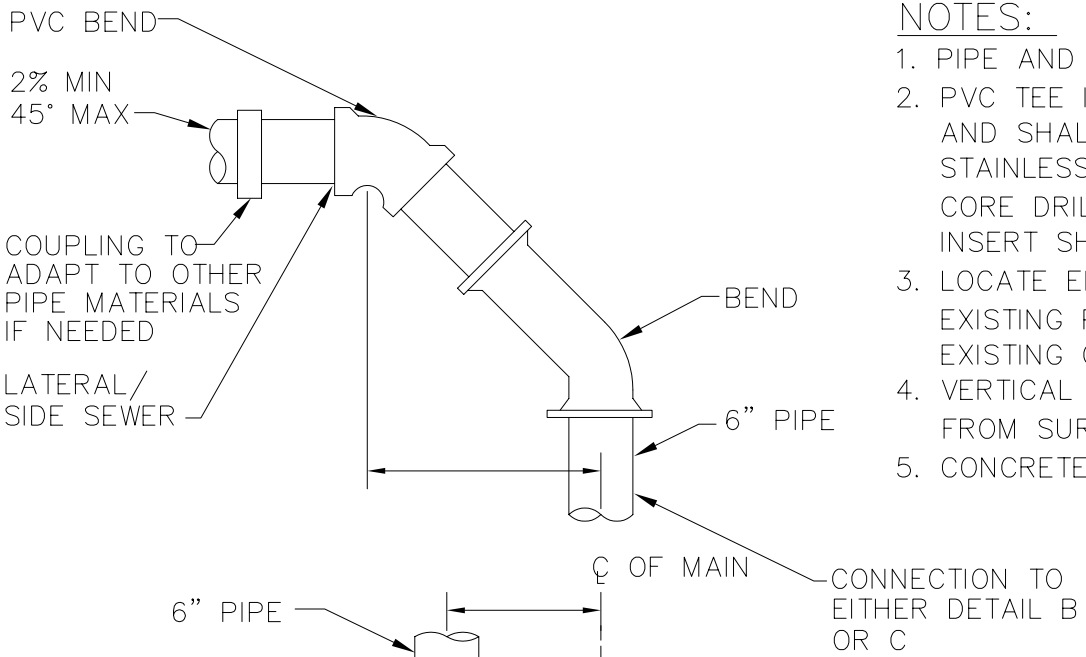

NOTES:

1. PIPE AND FITTINGS SHALL BE PVC PER ASTM D3034 SDR 35
2. PVC TEE INSERTS SHALL BE BY "INSERT A TEE" OR EQUAL AND SHALL INCLUDE RUBBER SLEEVE, PVC ADAPTER HUB AND STAINLESS STEEL BAND. INSERT SHALL BE INSTALLED IN A CORE DRILLED HOLE PER MANUFACTURER'S INSTRUCTIONS. INSERT SHALL BE FLUSH WITH THE INSIDE WALL OF THE MAIN.
3. LOCATE EDGE OF CORE DRILLED HOLE 1'-0" MINIMUM FROM EXISTING PIPE JOINT AND 2'-0" FROM THE EDGE OF ANY EXISTING OR NEW CONNECTIONS.
4. VERTICAL CONNECTION SHALL NOT BE USED UNLESS DEPTH FROM SURFACE TO TOP OF PIPE IS 20'-0" OR GREATER.
5. CONCRETE HAUNCHING IS TO BE CLASS 3000 CONCRETE.

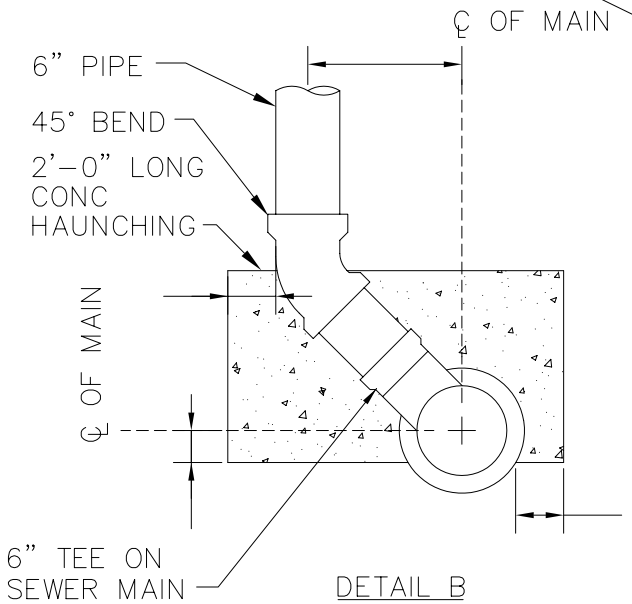

DETAIL B

FOR MAIN 36" DIA OR SMALLER

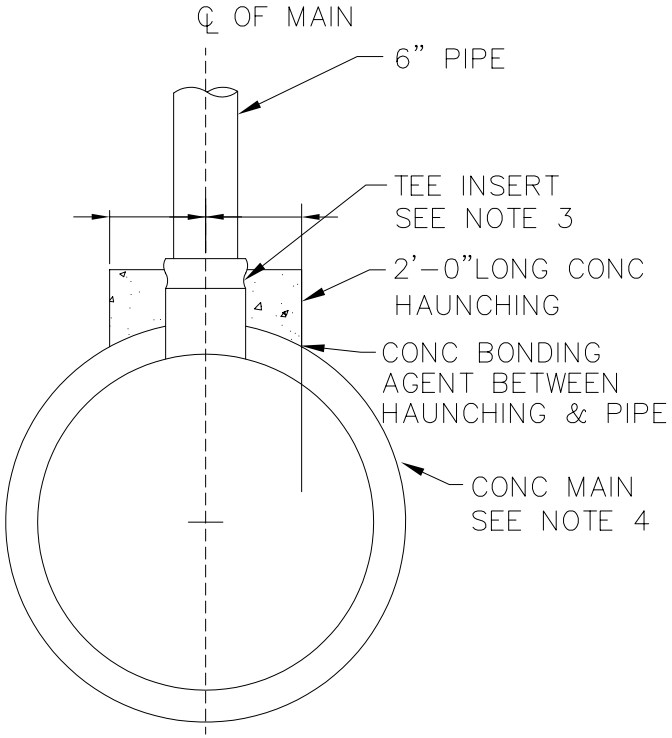

DETAIL C

FOR MAIN 42" DIA OR LARGER

VERTICAL LATERAL/SIDE SEWER CONNECTION

A

--

SCALE: NTS

Regional Infiltration/Inflow Control Program	DRAFT STANDARD I/I CONTROL FEATURES VERTICAL LATERAL/SIDE SEWER CONNECTION	DATE: SEP 04	DRAWN: TSM
		DWG NO: SS-3	

MWPAAC Engineering & Planning Subcommittee

FINAL DRAFT

Policies that Support Standards & Procedures

Regional I/I Control Program
Policies for I/I Reduction Projects

Introduction

Selecting effective engineering design standards and procedures also includes selecting policies associated with the application of the standards. Policies are necessary to guide effective I/I removal projects. They form a strong foundation for reducing the amount of infiltration and inflow that enters the public sewerage system, especially for rehabilitation standards and procedures. To that end, this section complements the Design & Engineering section of this document.

This policy section presents a wide range of topics, many of which were first introduced by representatives of Local Agencies during Regional I/I Control Program Workshops. In broad terms, the Policies address the issues of funding, public education, access to private property, inspection, permitting, liability, and storm water drainage. While the Policies include elements of the relationship between King County and the Local Agencies, their primary focus is on the relationship of the Local Agencies to their communities, contractors and customers. The material presents conceptual foundations for regional consensus, consistency and cooperation.

From the original, MWPAAC-accepted working draft of 23 policies (October 21, 2002), the number of policies included in this final draft has been reduced to 15. This reduction involved evaluating the experience gained from the I/I Program pilot projects and combining similar Policies where appropriate.

The Policies were originally separated into those addressing I/I reduction from private properties and those addressing I/I reduction from public properties. It was discovered during the pilot projects that such a division was unnecessary; thus several policies have been combined. The revised draft Policies therefore include Policies that apply to both private and public sewer systems. The Policy revisions are detailed in Appendix B, which includes the original Policies recommended by the E&P Subcommittee, lessons learned and suggestions for combining Policies from the Earth Tech consultant team, the revised Policies proposed by the Earth Tech consultant team in 2004, and the comments and decisions made by the E&P Subcommittee for this final draft document.

The following table lists the final draft Policies as approved by the E & P Subcommittee. These Policies are in support of the Standards and Procedures, are focused on actual I/I Reduction Projects and do not include all policies that will be considered in the Regional I/I Control Program.

Regional I/I Control Program

Summary of Listed Design Standards & Guidelines

Policy #1, Public Funding for I/I Reduction Projects: Public funding should be considered for all phases of I/I mitigation work on privately owned property. Funded work should include scope of work elements such as: permits, investigation, inspection and testing, any modifications to the side sewer connections and laterals, connections to public systems, restoration of disturbed areas (including landscaping, sidewalks, driveways, and rights-of-way) and post-rehabilitation testing and enforcement. Environmentally infeasible &/or prohibitively expensive modifications should be considered for variances/waivers.
Policy #2, Public Awareness of I/I: Educational Materials: King County, in conjunction with the Local Agencies, shall create and promote regional educational programs to introduce the general public to I/I as an issue, to explain the potential benefits from I/I mitigation efforts, and to inform the public of their responsibilities related to the I/I problem. Educational/informational materials shall be designed such that each local jurisdiction will be able to modify them to meet their local needs. Additionally, King County shall function as a central clearinghouse in responding to inquiries about the Regional I/I Control Program.
Policy #3, Public Awareness of I/I: Responsibility for Community: Unless otherwise specified or negotiated in the IGA, for each specific I/I reduction project being led by a Local Agency, the Local Agency shall be responsible for community education/involvement. Unless otherwise specified or negotiated in the IGA, if King County is the Lead Agency, the County shall be responsible for community education/involvement.
Policy #4, Access to Private Property for I/I Reduction and Control: The Local Agency shall pass the necessary ordinances/resolutions and develop the appropriate access agreements that allow each agency or its agents to gain access to private property, such as a right of entry or a construction and inspection easement. These agreements will allow certain actions related to I/I reduction and control, such as conducting a side sewer and/or lateral inspection; construction rehabilitation; or conducting code enforcement activities.
Policy #5, Inspection Training: To promote region-wide consistency, King County in conjunction with the Local Agencies shall provide training opportunities on the I/I Control Program to agency representatives. The training material will include a checklist of guidelines for best practices and the adopted Regional I/I Control Standards, Procedures & Policies.
Policy #6, Limiting Liability: If public resources support any portion of the I/I reduction work on privately owned property, then the Lead Agency shall establish a process to manage and limit its liability. The potential site and in-ground liability issues shall be a part of the I/I planning and design process, including an up-front agreement on when the jurisdiction's liability will begin and end.
Policy #7, Bonding, Licensing, Insurance and Warranty Provisions: The Lead Agency shall be responsible for ensuring that, for publicly funded I/I reduction projects, the construction contract includes appropriate bonding, licensing, insurance, and warranty provisions to ensure satisfactory completion of the project and warranty of the project for a sufficient amount of time (recommended minimum 12 months).
Policy #8, Storm Water Drainage Ordinances: Where I/I work on private or public property results in the diversion of storm water drainage, and there exists a storm water system, then the I/I work shall involve meeting the provisions of the controlling jurisdiction's current "storm water drainage" ordinances. Jurisdictional approval must be obtained.

Policy #9, Responsibility for Storm Water Drainage Where I/I work on private property results in the diversion of storm water and an adequate storm water system does not exist, then the private property owner bears responsibility for discharging the storm water drainage to an appropriate location. Where I/I work on public property results in the diversion of storm water and an adequate storm water system does not exist, the Local Agency or Associated Agency bears the responsibility for discharging the storm water drainage to an appropriate location.
Policy #10, Infeasible and/or Prohibitively Expensive Modifications: Where an I/I reduction project would result in the diversion of storm water drainage, and the modifications required to properly discharge the storm water are deemed to be infeasible &/or prohibitively expensive (for the property owner), consider giving the property owner choice of disconnection of illicit connection or surcharge.
Policy #11, Property Restoration: The Lead Agency shall establish a standard for property restoration before initiating any I/I work (including landscaping, sidewalks, and driveways). Public property restoration is governed by Local Agency or Associated Agency codes or ordinances. Options can include: 1 – "Restoration as near as possible to pre-construction condition" 2 – "Basing value on restoration to as near as possible to pre-construction condition, make up front property owner payment with signed waiver"
Policy #12, Contractor Qualifications: The Lead Agency shall develop in the bid specifications specific minimum experience requirements for contractors to ensure that the contractor hired will have experience in the type of work they are to perform.
Policy #13, Required Permits: The Local Agency should obtain all permits feasible, including the SEPA, HPA, 404, or other State or Federally required permits. The contractor should obtain permits as detailed in the specifications such as the building, road or utility, ROW use, &/or clearing and grading permits. The permits required to be obtained by the contractor should be specifically listed in the bidding documents.
Policy #14, Cooperative Efforts: For all permit needs, the jurisdictions including King County, the Local Agency, and the Associated Agency (if pertinent) will work cooperatively and collaboratively.
Policy #15, Revisions to Standards, Procedures, and Policies: MWPAAC shall review and make recommendations on proposed revisions to the Regional I/I Control Program Standards, Procedures, & Policies. MWPAAC shall recommend whether or not a revision should be adopted as part of the Regional I/I Control Program.

Page intentionally left blank

I/I POLICY CATEGORY: **Policy Considerations for Regional I/I Reduction Projects and Control Program That Support the Standards and Procedures (Applies to Public and Private Systems)**

I/I CONTROL POLICY ISSUE: **Program Design - Public Funding and Scope of Work**

The extent of public intervention and assistance in reducing or eliminating I/I from Private properties will be shaped by a series of public policy choices. Some of the choices, like incorporating extensive surface and sub-surface restoration of private property, may require a series of adjunct policies. Other approaches may require only minor modification of local codes and regulations.

POLICY 1

Public funding should be considered for all phases of I/I mitigation work on privately owned property. Funded work should include scope of work elements such as: permits, investigation, inspection and testing, any modifications to the side sewer connections and laterals, connections to public systems, restoration of disturbed areas (including landscaping, sidewalks, driveways, and rights-of-way) and post-rehabilitation testing and enforcement. Environmentally infeasible &/or prohibitively expensive modifications should be considered for variances/waivers.

Explanation

- Because maintenance and operation of the sanitary sewer system is for the public health and welfare, ensuring the elimination (or major reduction of) excessive I/I is usually considered a legitimate use of public funds.
- This alternative focuses on all types of private property, including residential commercial, and industry.

Potential Local Agency Impacts

- Given the expenditure required for public funding of an extensive program, the Regional I/I Control Program would probably be initiated in selected mini basins (or smaller areas) with excessive I/I flow rates and with cost-effective solutions.

Potential King County Impacts

- County may need to assist with code enforcement funding.

Potential Private Property/Ratepayer Impacts

- Property owners in a selected area would have to participate in this program.
- Utility rates would increase to pay for the I/I mitigation work; although substantial grant funding could reduce the burden on the local rate base.
- With full funding, issues such as constructing the program to accommodate economic hardship (of specific individuals as well as for customer classes such as those with fixed and low-income) would not be necessary. Administrative costs could probably be reduced through economies of scale.

Potential Regional Impacts

- The Local Agency or King County could directly employ contractors.
- Before rehabilitation work, the following areas would be “negotiated” with the property owner: a repair and rehabilitation agreement covering access to the property, and indemnifications and mandatory maintenance of the line by the property owner.

I/I POLICY CATEGORY:	**Policy Considerations for Regional I/I Reduction Projects and Control Program That Support the Standards and Procedures (Applies to Public and Private Systems)**

I/I CONTROL POLICY ISSUE:	**Community Education and Involvement – Regional Education Programs**

The I/I Control Program will result in the expenditure of public funds. There will be an array of inquiries, complaints, questions and suggestions from the general public, ratepayers, tenants and property owners. The manner in which these are tracked and resolved will have a major impact upon the public perception of the Regional I/I Control Program. For acceptance as a necessary public program, members of the public will need to understand the purposes of the regional program, and its benefits to the community and to individual property owners and rate payers.

POLICY 2

King County, in conjunction with the Local Agencies, shall create and promote regional educational programs to introduce the general public to I/I as an issue, to explain the potential benefits from I/I mitigation efforts, and to inform the public of their responsibilities related to the I/I problem. Educational/informational materials shall be designed such that each local jurisdiction will be able to modify them to meet their local needs. Additionally, King County shall function as a central clearinghouse in responding to inquiries about the Regional I/I Control Program.

Explanation

- Input from all of the focus group sessions associated with the Regional I/I Control Study stated that public education would be the key to addressing I/I from private property.
- The public's knowledge about storm and sanitary sewer systems and, in particular, I/I issues, is limited. Generating understanding of a program of this size and complexity is necessary in order to gain public support.
- A regional education program would explain the benefits of I/I reductions to:
  - the county-wide sewer system
  - the costs and benefits to the public, and
  - the benefits to private property owners.
- A central clearinghouse is easier to establish and publicize and it simplifies managing trained personnel. Its operation would be uniform and would help establish and maintain system-wide policies and standards. The staff of a centralized clearinghouse could be divided into geographic sections to allow for greater familiarity with local concerns and jurisdictions.
- Unit costs for such a centralized system should be lower than that of local offices and this might also allow for more comprehensive services: specialized help, longer hours of operation and better staff training.
- Communication between a centralized clearinghouse and a system-wide administration would be easier, while communications with the various sewer districts, Local Agencies, local jurisdictions and contractors could be more difficult.

Potential Local Agency Impacts

- The Local Agency would have less work in developing materials and operating local educational programs. If they desire, Local Agencies and jurisdictions could revise information or just insert the agency's logo.

- Decisions regarding resolution of issues would follow general, system-wide protocols. These may reduce the influence and specific decision-making powers of the Local Agency.
- Using trained customer service representatives who use consistent approaches would emphasize the *regional* nature of the I/I Control Program and buffer the Local Agency from dissatisfied individuals.
- It would allow for the wide distribution of contact information for I/I projects.
- A regional program should be coordinated with, and inform the public about, the role of Local Agencies and jurisdictions. A local staff member assigned to answer questions might help avoid the public's confusion about the program and the roles and responsibilities.

Potential King County Impacts

- King County would prepare and disseminate public educational material explaining the I/I Control Program.
- A countywide educational program would allow the County to establish a uniform "umbrella", and maintain common themes and ideas about the I/I Control Program.
- A countywide program would enable the distribution of overall program explanations and designs. It would also allow for more efficient distribution of information.
- The staff of a centralized clearinghouse would likely be better at understanding the system-wide issues but less familiar with local concerns.
- The program would have a stronger County identification.
- The clearinghouse might include a single phone number, advertised broadly and easily found.

Potential Private Property/Ratepayer Impacts

- An awareness that changes in managing sewer and storm water is about to take place.
- Materials are carefully tailored to areas with problems and geared to specific Local Agency needs; regional program ideas remain.
- Ongoing Public Education – In order to maintain the rehabilitated sewer system, the property owner will need to be reminded of the importance of keeping major landscaping and buildings out of the utility maintenance easement area.
- Interested parties would not have to search for whom to contact regarding the work to be, or being, done on their property. It might reduce the frustration of dealing with a "bureaucracy". On the other hand, those who continue to be dissatisfied may turn to local political representatives or agency managers for more satisfactory relief.

Potential Regional Impacts

- The initial media campaign would have a coordinated and uniform message (like the information on drought and energy management) with tweaks for each local area to meet their specific needs and issues.
- Such a program could use various regional resources including: schools, libraries, web sites, the media and mailing stuffers. This would reinforce the concept that I/I impacts the region and that the solutions are regional.
- The program would have a stronger regional approach.

* See Appendix D for samples for pilot projects

I/I POLICY CATEGORY: **Policy Considerations for Regional I/I Reduction Projects and Control Program That Support the Standards and Procedures (Applies to Public and Private Systems)**

I/I CONTROL POLICY ISSUE: **Community Relations – Specific Project Community Education and Involvement**

I/I reduction projects will disrupt public and private property. There will be an array of inquiries, complaints, questions and suggestions from the general public, ratepayers, tenants and property owners. The manner in which these are tracked and resolved will have a major impact upon the perception of the Regional I/I Control Program. For acceptance of specific I/I reduction projects, members of the public need to understand the purposes of the project, its benefits to the community and to individual property owners**.**

POLICY 3

Unless otherwise specified or negotiated in the IGA, for each specific I/I reduction project being led by a Local Agency, the Local Agency shall be responsible for community education/involvement. Unless otherwise specified or negotiated in the IGA, if King County is the Lead Agency, the County shall be responsible for community education/involvement.

Explanation

- It is generally better for the agency that is leading the project to be responsible for community relations, since they are most familiar with the specifics of the project and most aware of community concerns. Flexibility is provided, however, through the specific IGA so that, for each project, community relations' responsibility can be assigned to the Local Agency and/or King County as conditions merit.

Potential Local Agency Impacts

- Local jurisdictions have greater responsibility with locally managed projects: Local Agencies and jurisdictions would implement the local design and implementation of the project-related educational and community involvement material.
- If King County manages the project, King County would be most familiar with the project and generally be in the best position to lead community relations efforts, decreasing Local Agency staff and resource needs.
- Flexibility in the IGA allows the Local Agency great latitude in determining responsibility for community relations.
- A District may not have the legal authority or the political backing to resolve property issues within a city's boundaries.
- Public education will have to be carefully tailored to areas with problems.

Potential King County Impacts

- Less opportunity to generate regional approach.
- The County would usually not be the focal point for individual customer service issues for projects led by Local Agencies.

POTENTIAL PRIVATE PROPERTY/RATEPAYER IMPACTS • Individuals might feel that their elected local representatives would be more understanding and sympathetic to their concerns since materials are geared to their specific needs by the Local Agency. • If an individual disagreed with a staff member's decision, a local problem resolution process may be more convenient and familiar. • No "economies of scale" in comparison to regional system.
POTENTIAL REGIONAL IMPACTS • No regional approach.

* See Appendix D for samples from pilot projects

I/I POLICY CATEGORY: **Policy Considerations for Regional I/I Reduction Projects and Control Program That Support the Standards and Procedures (Applies to Public and Private Systems)**

I/I CONTROL POLICY ISSUE: **Rehab Planning, Oversight, Inspection, Monitoring and Testing – Right of Entry**

With specific exceptions, individuals cannot enter or alter property owned by another individual without explicit permission (authority for utility representatives to access private premises for the purpose of inspecting and determining code compliance can be legislated for public health and welfare). Yet initial follow-up and inspection of the condition and installation of public sewer lines and private sewer and storm drainage connections is a key to ensuring that I/I is not occurring. New standards need to be developed to ensure that the system remains intact and maintained. The right of entry for purposes other than verification of code compliance usually requires either a written agreement between the public entity and the private property owner or a notice of potential legal action.

POLICY 4

The Local Agency shall pass the necessary ordinances/resolutions and develop the appropriate access agreements that allow each agency or its agents to gain access to private property, such as a right of entry or a construction and inspection easement. These agreements will allow certain actions related to I/I reduction and control, such as conducting a side sewer and/or lateral inspection; construction rehabilitation; or conducting code enforcement activities.

EXPLANATION

- The right of entry to verify code compliance is usually limited in several ways, the most basic of which is that entry must occur at reasonable times. This and other limiting provisions listed below may be adopted by the utility's administration and may not be codified.
  - Entry only by individuals with "proper" identification;
  - Entry only with prior notice;
  - Entry only with written information regarding the nature of the inspection and with the findings of the investigation (notice of non-compliance with which specific portions of the code; notice of remedies and/or potential penalties).
- The method(s) used for code compliance enforcement, inspection and testing or monitoring is not implicitly or explicitly included in this basic right of entry.
- Right of entry agreements, easements and legal notices will vary in complexity and scope of action though with legal advice some basic policy procedures can be drafted and used in routine actions. Unique agreements would be drafted for complex or unusual situations. General delimiters for access agreements include scope of public action, result of property damage or personal injury, and hold harmless and indemnification provisions. Administrative use of these legal instruments depends upon the authority granted by the Local Agency's legislative body.

POTENTIAL LOCAL AGENCY IMPACTS

- Allows the flexibility for Local Agencies to select and implement their preferred programmatic approach (e.g., all new side sewers could be located in an easement area that allows for future entry by the Local Agency to perform inspections and work without a separate right-of-entry agreement; side sewer permits could be expanded to include the entire residential drainage system).
- Local Agencies will undertake different actions according to their I/I reduction projects and applicable local regulations. Since most municipalities' codes allow only sewerage to enter the sanitary

sewer system, using the basic right of entry to investigate code compliance could be the first action to control improper inflow from private property. Once the initial I/I control remedies are in place, periodic investigation of code compliance may involve increased resources such as: inspectors, code compliance officers, engineers and/or attorneys. Record keeping would be crucial to track follow-up actions and inspection schedules.

- Utility storm water and sanitary sewer codes may have to be amended to include right-of-entry authority.
- The ease or difficulty of obtaining specific right-of-entry agreements or easements will depend on the property's I/I contribution to the system and the Policies and Standards of the I/I Control Program, e.g., the scope of work or the amount of restoration.
- Coordination between areas of responsibilities would be key, e.g., building permits and sewer permits; building and utility inspectors; maintenance, engineering and CIP personnel.

Potential King County Impacts

- County Council may have to pass an ordinance granting Local Agencies authority.

Potential Private Property/Ratepayer Impacts

- Many individuals may not realize that municipal representatives have the authority to enter their property to perform code compliance inspections. Municipal employees and legislators may have to cope with a range of reactions from accommodation to active resistance. These actions can be anticipated and a plan of action established.
- The types of private improvements (and landscaping) in the easement area should be restricted to simplify and standardize any future side sewer work and to prevent side sewer deterioration. There should be restrictions to the property owner making changes in side sewer location when remodeling occurs.
- The residential property owner's contractor would remain responsible for the work performed meeting code and that it is "signed off" by the jurisdiction's inspector.
- The cost of permits could increase to cover the increased intensity of service or the cost could be absorbed within the general residential rate base.

Potential Regional Impacts

- If an aggressive code compliance investigation program is initiated without the follow-up of code enforcement, there will be no change in the amount of I/I entering the system from private property.

I/I POLICY CATEGORY:	**Policy Considerations for Regional I/I Reduction Projects and Control Program That Support the Standards and Procedures (Applies to Public and Private Systems)**

I/I CONTROL POLICY ISSUE:	**Rehabilitation Planning and Oversight – Inspection and Testing**

Initial and follow-up inspection and investigation of the condition and installation of public sewer lines and private sewer and storm drainage connections is a key to ensuring that neither inflow nor infiltration is occurring. The type and extent of inspection and investigation could vary depending upon the focus, extent and the approach selected to remove I/I from privately owned property and public sewer lines.

POLICY 5

To promote region-wide consistency, King County in conjunction with the Local Agencies shall provide training opportunities on the I/I Control Program to agency representatives. The training material will include a checklist of guidelines for best practices and the adopted Regional I/I Control Standards, Procedures & Policies.

Explanation

- Because inspections are such an integral part of controlling I/I from private property, specially trained staff would ensure that the inspections occur with consistency and uniformity.
- The inspections could include a regionally uniform variety of tasks, such as: checking all connections, testing all lines, verifying the functionality of on-site and/or off-site storm drainage management, and ensuring restoration of sidewalks, driveways and rights of way.

Potential Local Agency Impacts

- Side sewer permits would be expanded to include the entire residential drainage system.
- Coordination between areas of responsibilities would be key, for example, building permits and sewer permits; inspectors and paving crews; sewer maintenance/storm water maintenance and inspectors; and inspectors and maintenance, engineering and CIP personnel.

Potential King County Impacts

- Workload and equipment sharing could produce an economy of scale.
- Preparation of training material and course curriculum as well as scheduling and holding training sessions would be County responsibilities.

Potential Private Property/Ratepayer Impacts

- The property owner's contractor would remain responsible for ensuring work performed on private residential property meets code and has been "signed off" by the Local Agency's "I/I Control Inspector".
- The cost of this expanded inspection and testing service could be included in the jurisdictions' sewer permit, in the base ("METRO") wholesale rate, or be absorbed within a newly created I/I rate component.

Potential Regional Impacts

- Cross-training and a widened skill base (including storm water, plumbing, residential drainage and sanitary sewer guidelines and codes) may provide the foundation for an inter-disciplinary approach to problem solving, and a basin perspective in addition to a jurisdictional perspective.

- Some form of auditing might be appropriate to ensure the inspections, investigations and tests are consistent with the Regional I/I Control Program Standards and Guidelines.

I/I POLICY CATEGORY: **Policy Considerations for Regional I/I Reduction Projects and Control Program That Support the Standards and Procedures (Applies to Public and Private Systems)**

I/I CONTROL POLICY ISSUE: **Rehabilitation Planning and Oversight – Liability**

All phases of the I/I work on privately owned property could create liability issues. Some liability issues such as negligence, is a recognized concern. Side sewer and other excavation on private property may result in some special liability issues. The standards of work and documentation of conditions on private land are more varied than those found on public property and public right-of-ways. Potential liability matters may be limited in various ways.

POLICY 6

If public resources support any portion of the I/I reduction work on privately owned property, then the Lead Agency shall establish a process to manage and limit its liability. The potential site and in-ground liability issues shall be a part of the I/I planning and design process, including an up-front agreement on when the jurisdiction's liability will begin and end.

Explanation

- When digging on private land, various types of unexpected conditions and systems are likely to be found, for example: underground oil tanks and contaminated soils, sprinkler systems and water lines, “invisible” dog fences, non-conforming in-use wells and septic systems, electrical and data cables, etc. Some of these conditions and systems are likely to be found in the areas of any side sewer work and pose a liability issue to the homeowner, contractor, governmental agency and/or the general public.
- Field reports suggest that about 25% of oil tanks leak. If contaminated soil is found during an excavation, then remediation is required and the issue of liability would have to be addressed.

Potential Local Agency Impacts

- Pre-digging protocols such as inspections to identify underground infrastructures and/or contaminated soil could reduce the potential liability disputes and costs.
- Resolution of disputes may become an issue that will need to be addressed by Local Agency staff and/or their attorneys.
- The responsible jurisdiction will *need to work closely with the homeowners, no matter what.*

Potential King County Impacts

- If King County is the Lead Agency, inspectors and administrative staff will be necessary to assist in minimizing liability.

Potential Private Property/Ratepayer Impacts

- Property owners may refuse permission to inspect or test for potential liability issues and might prefer not to know about such issues.
- Property owners may end up having to address the problem of soil contamination.
- Property owners will desire that the work minimize disruption to property existing improvements and landscaping.

Potential Regional Impacts

-

I/I POLICY CATEGORY:	**Policy Considerations for Regional I/I Reduction Projects and Control Program That Support the Standards and Procedures (Applies to Public and Private Systems)**

I/I CONTROL POLICY ISSUE:	**Contractor Bonding, Licensing and Warranty**

POLICY 7

The Lead Agency shall be responsible for ensuring that, for publicly funded I/I reduction projects, the construction contract includes appropriate bonding, licensing, insurance, and warranty provisions to ensure satisfactory completion of the project and warranty of the project for a sufficient amount of time (recommended minimum 12 months).

Explanation

- Contractors for public projects must be licensed, bonded and insured. For publicly funded projects, agencies generally establish standards for contractor bonding, end of project retainage, and warranties that ensure the completed facilities will continue to function as intended for a reasonable period of time.
- A schedule of required contractor warranties would be established at the beginning of a project. For example, pipe performance would have a longer warranty requirement than pumps.

Potential Local Agency Impacts

- A "retainage" could be required to be held back after "substantial completion" of the work. The retainage would be released once all punch list items have been completed and final inspections performed.
- Bonding, retainage and warranties reduce the likelihood of poor work and future maintenance/repair requirements. However, such standards increase contractor costs and prices.
- All contractors could be required to maintain a performance bond equal to a pre-determined percentage of the project cost.
- Such standards increase contractor costs and prices.

Potential King County Impacts

- Bonding, retainage and warranties reduce the likelihood of poor work and future maintenance/repair requirements.

Potential Private Property/Ratepayer Impacts

- Higher up front costs, but lower maintenance costs.
- Better quality control of the I/I work.
- Any allowed "do it yourself" work would most likely not be subject to bonding or warranty requirements.

Potential Regional Impacts

- Better long term I/I control.

I/I POLICY CATEGORY: **Policy Considerations for Regional I/I Reduction Projects and Control Program That Support the Standards and Procedures (Applies to Public and Private Systems)**

I/I CONTROL POLICY ISSUE: **On-site Storm Drainage Management**

If storm water is diverted away from the existing sanitary sewer system, then alternatives may need to be found for the diverted storm water. Property owners, Local Agencies and Associated Agencies may need new options for surface and ground water drainage management.

POLICY 8

Where I/I work on private or public property results in the diversion of storm water drainage, and there exists a storm water system, then the I/I work shall involve meeting the provisions of the controlling jurisdiction's current "storm water drainage" ordinances. Jurisdictional approval must be obtained.

Explanation

In areas with an existing public storm water management system, all drainage diverted from the sewer system could be discharged into the storm water system, provided that:

- The jurisdiction controlling the public storm water system approves the connection; and
- There are sound design options, capacity and gravity flow.

Potential Local Agency Impacts

The capacity of the storm water system would have to be evaluated and a determination made regarding these new loads. Some of the storm water systems may have to be upgraded. The costs for engineering analysis and design, construction and connections may be significant. Grants from the County's Surface Water Utility or the Public Works Trust Fund might help defray the cost of new and/or expanded storm water systems.

This policy assumes that public funds for the removal of I/I would pay for the permits, engineering and other expenses associated with connecting storm water to a public system.

Potential King County Impacts

The County may consider ensuring adequate capacity of public storm water systems as an adjunct cost to the I/I program, but that would significantly reduce funds available for directly reducing regional I/I.

Potential Private Property/Ratepayer Impacts

This will likely improve drainage and water intrusion problems for the affected homes and properties. The cost of the lines and connections to the storm water system will depend upon individual conditions.

Potential increased storm water costs, including costs to connect to the storm sewer system.

Potential Regional Impacts

I/I POLICY CATEGORY: **Policy Considerations for Regional I/I Reduction Projects and Control Program That Support the Standards and Procedures (Applies to Public and Private Systems)**

I/I CONTROL POLICY ISSUE: **On-site Storm Drainage Management**

If storm water is diverted away from the existing sanitary sewer system, then alternatives may need to be found for the diverted storm water. Property owners, Local Agencies and Associated Agencies may need new options for surface and ground water drainage management.

POLICY 9

Where I/I work on private property results in the diversion of storm water and an adequate storm water system does not exist, then the private property owner bears responsibility for discharging the storm water drainage to an appropriate location.

Where I/I work on public property results in the diversion of storm water and an adequate storm water system does not exist, the Local Agency or Associated Agency bears the responsibility for discharging the storm water drainage to an appropriate location.

EXPLANATION

- Connecting residential storm water systems to the public sewer system is illegal. Therefore, illicit connections should be removed. This is a provision of the contract between the Local Agencies and King County.
- Properties with impermeable and semi-permeable surfaces have storm water drainage requirements. For example: most roofs and driveways, lawns and hard packed soils don't allow for storm water absorption, retention or evaporation. Alternative practices can be used to reduce or eliminate the need for off site storm water systems. For example:
  - Surface and ground water drainage can be collected and directed to location(s) on the property where the water can drain into the ground by means of an energy dissipation basin (French drain). The feasibility and effectiveness of such systems depend upon its design, lot size and topography, soil type and local area conditions. The complexity of energy dissipation basins will also depend upon local conditions and drainage requirements.
  - Poor maintenance can increase and exacerbate storm water problems. Tree limbs that overhang houses tend to increase the need for gutter and drain line cleaning/maintenance. Improper soil drainage at the perimeter of structures can increase basement and crawl space flooding.
  - Special landscaping practices can increase storm water absorption and retention.
  - Roofs with a planted sod layer can hold and evaporate storm water.
  - Driveways can be made out of porous pavers and other materials that allow for water absorption.
  - Rain barrels and cisterns can be used to recycle storm water for gardening and some domestic use.
  - Ponds can be used to hold and evaporate storm water.

Potential Local Agency Impacts

- Design and construction review may be required. As a first measure, this could be a lower cost alternative for Local Agencies than side sewer repair. If properly designed, constructed and inspected, once in place, there would be little impact on Local Agencies.
- Reduction of storm water flow into the sanitary and storm water system.

Potential King County Impacts

- On site drainage system will result in lower storm water inflow into the County's sewage conveyance and treatment system.

Potential Private Property/Ratepayer Impacts

- Appropriate management of storm water flow on private property could have direct benefits to the homeowners and the public sanitary and storm water systems, such as:
  - Proper use of on-site storm water management systems would likely result in dryer homes, basements and crawl spaces.
  - Dryer homes tend to have fewer problems with wood destroying organisms, mold and mildew. Dryer homes have longer lasting furnaces, roofing and interior surfaces.
  - Many of the defects that are likely to be found in such inspections have low cost and low impact solutions. Such on site systems usually don't require extensive digging or interference with decks or in-ground systems such as water lines or oil tanks.
  - When properly designed, they require a modest amount of maintenance.

Potential Regional Impacts

-

I/I POLICY CATEGORY: **Policy Considerations for Regional I/I Reduction Projects and Control Program That Support the Standards and Procedures (Applies to Public and Private Systems)**

I/I CONTROL POLICY ISSUE: **On-site Storm Drainage Management**

If storm water is diverted away from the existing sanitary sewer system, then alternatives may need to be found for the diverted storm water. Property owners, Local Agencies and Associated Agencies may need new options for surface and ground water drainage management.

POLICY 10

Where an I/I reduction project results in the diversion of storm water drainage (e.g., removal of illicit connections), and the modifications required to properly discharge the storm water are deemed to be infeasible &/or prohibitively expensive (for the property owner), consider giving the property owner a choice of disconnection of illicit connection or surcharge.

Explanation

- Connecting residential storm water systems to the public sewer system is illegal. Therefore, illicit connections should be removed. This is a provision of the contract between the Local Agencies and King County. However, if re-routing the storm water drainage, to either a public storm water management system or another appropriate location is deemed infeasible &/or prohibitively expensive (for the property owner), the alternative of a surcharge may be offered.

Potential Local Agency Impacts

- If a property owner chooses to pay a surcharge, rather than to disconnect an illicit connection, utility rate revenue will increase.
- Additional administrative processes will be necessary.

Potential King County Impacts

- If a property owner chooses to pay a surcharge, rather than to disconnect an illicit connection, a smaller amount of I/I reduction may be achieved in the County's regional sewer system than the County expected.

Potential Private Property/Ratepayer Impacts

- A private property owner with an illicit connection may have the opportunity to reduce the cost of compliance.

Potential Regional Impacts

- If private property owners choose to pay surcharges instead of re-routing storm water drainage from illicit connections, a smaller amount of I/I reduction may be achieved in the regional sewer system than the County expected, and the timeline for building new regional sewer capacity may be advanced. This could increase sewer rates region-wide earlier than expected.

I/I POLICY CATEGORY:	**Policy Considerations for Regional I/I Reduction Projects and Control Program That Support the Standards and Procedures (Applies to Public and Private Systems)**

I/I CONTROL POLICY ISSUE:	**Post-Rehabilitation Management – Restoration**

Many of the private property I/I mitigation options can interfere with private property conditions, especially buildings, site work and landscaping. Restoration of these disturbed areas could be expensive and complicated. A poorly understood or badly managed restoration policy and program could lead to significant public distrust, concerns, and problems. A policy is required that outlines the roles, responsibilities and any limits on such restoration work.

POLICY 11

If confirmed by legal counsel.

The Lead Agency shall establish a standard for property restoration before initiating any I/I work (including landscaping, sidewalks, and driveways). Public property restoration is governed by Local Agency or Associated Agency codes or ordinances.

Options can include:

1 – "Restoration as near as possible to pre-construction condition"
2 – "Basing value on restoration to as near as possible to pre-construction condition, consider up front property owner payment with signed waiver"

Explanation

- Some amount of restoration of private properties would be part of the I/I reduction program.
- Prior to the start of any I/I work, the property would be inspected and photographed, and relevant improvements and conditions would be thoroughly documented.
- The public funds used for this purpose would compensate for all of the agreed to restoration work or up front payment in recognition of the public benefits derived from the I/I program.
- Since certain plant/vegetation types are not easily restored, a "restoration to pre-construction condition" standard is not always possible.
- Disagreements would use the preferred method as chosen from the alternatives under Policy 4.

Potential Local Agency Impacts

- A more complex program that recognizes the impact of the I/I program upon private property.

Potential King County Impacts

- Higher program cost and potential for property owner dissatisfaction with the extent or quality of the restoration work.

Potential Private Property/Ratepayer Impacts

- Impacted Property Owners – Depending on the choice made, property impacts could be small to large, but property owner would receive rehabilitated side sewer.
- Ratepayers – Increases the cost of the I/I Control Program and therefore might result in higher rates.

Potential Regional Impacts

- Depending on choice made, I/I reduction at a higher cost.

I/I POLICY CATEGORY: **Policy Considerations for Regional I/I Reduction Projects and Control Program That Support the Standards and Procedures (Applies to Public and Private Systems)**

I/I CONTROL POLICY ISSUE: **Contractor Qualifications**

A critical success factor for reducing I/I is to make sure contractors have experience using acceptable materials and skilled labor resources to perform construction and I/I rehabilitation of public sewer systems. One way to assure the qualifications of the contractors is through a review of their past performance and bonding and financial ability, and of the experience of their key supervisory staff. Contractor qualifications often become an issue during the selection process on public projects since the primary basis of award is "Low Bid".

POLICY 12

The Lead Agency shall develop in the bid specifications specific minimum experience requirements for contractors to ensure that the contractor hired will have experience in the type of work they are to perform.

Explanation

- The ability to require contractors to meet certain minimum experience conditions can result in better I/I reduction projects.
- Prior experience with specialized sewer technologies is necessary to ensure correct handling and application of these technologies. Prior experience with construction such as tunnels, systems restoration/rehabilitation, and deep excavation is also necessary.

Potential Local Agency Impacts

- Assures higher quality work.

Potential King County Impacts

- Greater probability of highest quality sewer systems and thus less potential for I/I in the future.
- Possible requirements for "Regional" minimum experience standards for sewer contractors hired by the County to assure more consistent construction.

Potential Private Property/Ratepayer Impacts

- Assurance of quality systems, lower potential for future repair/replacement, better bids and less chance for disputes.

Potential Regional Impacts

- Better overall sewer systems and less potential for I/I in the future.
- Reduces potential for contractors lacking adequate experience to be able to bid on public sewer work.

I/I POLICY CATEGORY: **Policy Considerations for Regional I/I Reduction Projects and Control Program That Support the Standards and Procedures (Applies to Public and Private Systems)**

I/I CONTROL POLICY ISSUE: **I/I Reduction Projects – Permits**

Permits and conditions are usually required on I/I reduction projects. Responsibility for obtaining these permits can vary. This policy gives general guidance as to how this should be handled.

Policy 13

The Local Agency should obtain all permits feasible, including the SEPA, HPA, 404, or other State or Federally required permits. The contractor should obtain permits as detailed in the specifications such as the building, road or utility, ROW use, &/or clearing and grading permits. The permits required to be obtained by the contractor should be specifically listed in the bidding documents.

Explanation

- Several permits may be required for work on I/I reduction projects. Project environmental permits should be obtained by the Local Agency, while permits such as building, utility and ROW should be obtained by the contractor.

Potential Local Agency Impacts

- The Local Agency would be responsible for obtaining those permits not specifically related to construction as part of its administrative duties.
- Potentially higher program cost.

Potential King County Impacts

- If the IGA designates King County as responsible for obtaining permits, additional King County resources will be necessary.

Potential Private Property/Ratepayer Impacts

- Permits and conditions associated with permits help assure that public concerns and issues are addressed and mitigated.

Potential Regional Impacts

-

I/I POLICY CATEGORY:	**Policy Considerations for Regional I/I Reduction Projects and Control Program That Support the Standards and Procedures (Applies to Public and Private Systems)**

I/I CONTROL POLICY ISSUE:	**I/I Reduction Projects – Permits**

Because there is a likelihood that multiple jurisdictions will be involved in obtaining permits, it is necessary to encourage cooperative, coordinated efforts.

POLICY 14

For all permit needs, the jurisdictions including King County, the Local Agency, and the Associated Agency (if pertinent) will work cooperatively and collaboratively.

EXPLANATION

- Permit efforts in the I/I program will likely require multiple jurisdictions, and coordinated, cooperative efforts will allow for better communications and permit processing.

POTENTIAL LOCAL AGENCY IMPACTS

- Coordination will be necessary with King County and the Associated Agency.

POTENTIAL KING COUNTY IMPACTS

- Coordination will be necessary with the Local Agency and the Associated Agency.

POTENTIAL PRIVATE PROPERTY/RATEPAYER IMPACTS

- Coordinated, cooperative efforts will save money and result in better projects.

POTENTIAL REGIONAL IMPACTS

- Coordinated, cooperative efforts will increase overall communication in the I/I Control Program.

I/I POLICY CATEGORY: **Policy Considerations for Regional I/I Reduction Projects and Control Program That Support the Standards and Procedures (Applies to Public and Private Systems)**

I/I CONTROL POLICY ISSUE: **Revisions of Standards and Guidelines**

As new experience, technology and information support changes in the regional standards, a method to revise the standards will be needed. Revisions may be of a regional, uniform nature or they may be unique to one or more of the Local Agencies. If Local Agencies individually revise standards, over time, the standards could vary from the regional "model"; although, the degree and significance of the variance are difficult to predict.

POLICY 15

MWPAAC shall review and make recommendations on proposed revisions to the Regional I/I Control Program Standards, Procedures, & Policies. MWPAAC shall recommend whether or not a revision should be adopted as part of the Regional I/I Control Program.

Explanation

- MWPAAC is the official representative body for the Local Agencies who are served by the King County Wastewater Treatment Division. It is a group recognized by the Local Agencies and the County as the arena for discussing and recommending policies that affect all the agencies. King County is also a member of MWPAAC.
- The underlying assumption for adoption of Regional I/I Control Standards is that the standards provide a uniform foundation for comparing and evaluating engineering techniques regardless of location within the region. Validation of information will not be scientifically valuable if different standards are applied to solve similar I/I control problems. Disallowing independent revision of standards would reduce, if not eliminate, variability from the regional "model".

Potential Local Agency Impacts

- As part of the decision-making process, the Local Agencies would consider whether or not to actively participate on the MWPAAC Subcommittee – weighing the consequences for their agency.
- For any recommended changes to the I/I Control Program, each Local Agency will have the ability to review and provide input on that particular change.
- Local Agencies would not have the unilateral authority to make revisions.
- As part of the regional decision-making process, the Local Agencies would abide by the recommendations of the MWPAAC vote as they negotiate Intergovernmental Agreements with King County.

Potential King County Impacts

- Provides one established group as the group to go to related to the I/I Control Program.
- The County may become the repository of the "master document". Revisions and updates that change the document would not be through the County Council or a representative of the County Administration, but by the vote of the MWPAAC membership.
- King County can work with one entity for resolving I/I Control Program issues.

POTENTIAL PRIVATE PROPERTY/RATEPAYER IMPACTS

- It may be perceived to be more difficult for individuals to influence changes to the standards if there is a regional group rather than if there is a local administrative or legislative method.
- Local codes and regulations governing individual waivers and variances would remain intact.

POTENTIAL REGIONAL IMPACTS

- Standards would be relatively uniform throughout the service area; with the possible exception that non-MWPAAC jurisdictions may make revisions without feeling bound to MWPAAC recommendations.

Page intentionally left blank

MWPAAC Engineering & Planning Subcommittee

FINAL DRAFT

Intergovernmental Agreement (IGA)

Regional I/I Control Program Intergovernmental Agreement

Introduction

This Intergovernmental Agreement (IGA) chapter provides the Local Agencies and King County with a model for the specific agreements that will be necessary between King County and a Local Agency to successfully manage an I/I reduction project. This chapter starts with this introduction and is followed by a model/template IGA. A guidance table that indicates eligibility for I/I program funding concludes this section.

The model/template IGA makes available standard clauses and choices of language that may or may not be included in an actual IGA. An IGA is intended to be an agreement between governments, specifically a particular Local Agency and King County, and not between the I/I reduction project manager and a contractor. The following schematic shows both of these relationships:

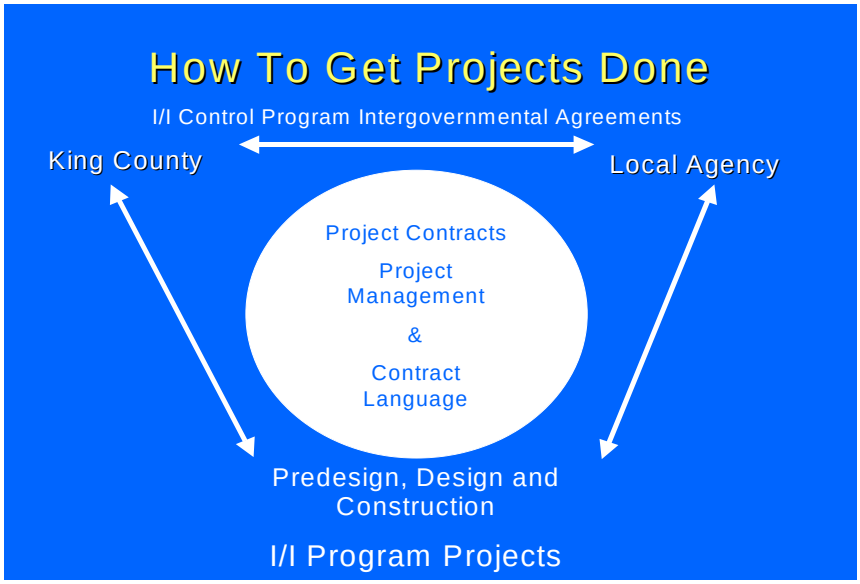

An intergovernmental agreement will be necessary regardless of whether the I/I reduction project is managed and administered by the Local Agency or by King County, thus the model/template IGA provides alternative language for both scenarios.

The IGA alternatives were originally evaluated by the E&P Subcommittee, and a working draft model/template IGA was drafted in 2002 out of those discussions and decisions. The analysis of alternatives for that working draft IGA was a complex undertaking, one that required Local Agency representatives (on the E&P Subcommittee) and King County to make choices related to implementing a Regional I/I Control Program. Many of the language options raised fundamental decisions of managing and administering I/I reduction projects within particular Local Agencies.

The working draft IGA was used during the pilot projects, with modifications made as necessary. Based on those modifications, the Earth Tech consultant team included revisions to the

model/template IGA. The E&P Subcommittee discussed the modifications and approved the final draft model/template IGA that appears below. Specific policies and terms of any IGA are of course open to discussion and decision by each Local Agency and King County.

It is worth noting that several items are not included in this IGA chapter because it is believed that they do not affect I/I reduction. These IGA topics are:

1. Patents
2. Americans with Disability Act
3. Legal Relation (Indemnification)
4. Termination
5. Miscellaneous
6. Entire Agreement Section

AMENDMENT NO. ___ TO UTILITIES COOPERATION AGREEMENT BY AND BETWEEN

<Local Agency>

AND

KING COUNTY

FOR INFILTRATION/INFLOW CONTROL PROJECT

THIS AMENDMENT NO. ---- is made and entered into this _____ day of _____ between the City/District of _____(hereinafter, "_____") and King County, a home rule charter county in the State of Washington, acting through its Department of Natural Resources and Parks (hereinafter, "the County" or "DNRP").

WHEREAS, the parties desire to reduce I/I from both the <Local Agency> systems and the King County conveyance and treatment systems in order to enhance environmental and public health benefits and in order to improve system capacity conditions; and

WHEREAS, <Local Agency> and King County have cooperatively developed a Regional I/I Control Program, the intent of which has been to establish a regional plan for developing technical, policy, and financial means for reducing I/I in the regional system; and

WHEREAS, King County desires to work with <Local Agency> to investigate the sewer system and reduce infiltration and/or inflow as a means to reduce flows to the King County conveyance and treatment systems; and

WHEREAS, <Local Agency> desires to control infiltration and inflow into their Local wastewater system and thereby reduce sewer flows that enter the regional wastewater system; and

WHEREAS, the parties desire to designate management and administrative responsibility and determine funding; and

WHEREAS, <City/District>_____ and King County entered into an Agreement dated _____, regarding participation in the County Infiltration/Inflow (I/I) Program Study, and

WHEREAS, the Parties desire to amend the prior Agreement by this Amendment No. _____.

NOW, THEREFORE, the parties do Agree as follows: The prior Agreement is modified, altered, and changed in the following respects only:

MODIFICATIONS AND INSERTIONS

<Applicable when either the Local Agency or the County is the Lead Agency>

Addition to Section 1: Purpose and Duration of the original Agreement

Section 1: Purpose and Duration

1.4 Purpose of Amendment

<Clause "a" when Local Agency is the lead>

a. The purpose of the Amendment is to provide for <Local Agency> management and administration of the project and to further provide for King County funding of the project and oversight of <Local Agency> management and administration responsibilities.

<Clause "a" when County is the lead>

a. The purpose of the Amendment is to provide for King County management, administration and funding of the project and assign certain specific duties and oversight to <Local Agency>.

b. In order to quantify the effectiveness of the rehabilitation work performed within the project area, King County may conduct pre and post-construction flow monitoring

c. To maintain that project work will take place and be completed by <date>.

1.5 Sharing Information

The Parties agree that in order to maximize the efficiency of the I/I reduction projects, the Parties, to the extent allowable by <Local Agency> and King County policy, will share all pertinent information, especially as-built information related to the I/I reduction project, including but not limited to: design, cost estimates, specifications, bid documents, Geographic Information Systems (GIS), Sanitary Sewer Evaluation System (SSES), flow data, modeling, surveying information, citizen concerns and issues, etc.

Note: The pilot projects showed that inaccurate or non-existent as-builts led to concerns and necessitated much greater investigations.

Note: The pilot projects showed that regular construction meetings including both the County and the Local Agency were needed to avoid conflicts and concerns from arising.

1.6 Uniform Record Keeping and Constructed Drawings

The Parties agree to the goal that databases, information, records and constructed drawings will be in an electronic form mutually agreed upon and usable by the other party.

1.7 Sharing Materials and Equipment

The Parties agree to share materials and equipment to the extent possible in order to provide as efficient and cost effective a project as possible.

1.8 Standards, Procedures, Policies

The Parties agree that in order to maintain consistency, fairness, and quality projects that are effective in removing I/I and that benefit the Regional I/I Control Program, the Parties will use, at a minimum, the I/I Control Program Standards, Procedures, and Policies during the design and construction of this project.

<Use the following Modifications and Insertions when the Local Agency is the Lead Agency>

1.9 Changes in Scope of Work, Cost and/or Conditions
The Parties agree that change orders for scope of work, costs and/or changes in conditions will not result in an increased contribution to the project budget by the County. The financial contribution by King County to the project shall be _____ dollars ($_____)(Exhibit B). If one or more change orders result in significant cost increases to the project, the project scope of work will be re-evaluated and changed as necessary and as approved by both <Local Agency> and the County to ensure that the project budget stays within approved limits. If any single change order would result in or make necessary multiple similar change orders at other sites throughout the project basin, the initial change order shall be reviewed and approved by both <Local Agency> and the County. The Project Cost Estimate (Exhibit B) includes a 10% contingency for change orders for scope of work, costs, and/or for changes in conditions.

1.10 Ownership of Improvements
There will be no changes in facilities ownership due to any project improvements made, even if the improvements are made to private property.

1.11 Associated Agencies
Both parties will take steps necessary to inform and include <Associated Agency> in I/I reduction projects, including <be specific, e.g., communications, approvals, and involvement>.

> *Note: This section was not included in the original IGA template or in the actual IGA's for the pilots and was recommended as a valuable addition.*

Addition to Section 2: County Responsibility of the Original Agreement

Section 2: King County Responsibilities

2.8 Environmental Review Process
<Local Agency> agrees to prepare an Environmental Review Document highlighting the I/I Program with specific information about this project.

2.9 Securing Applicable Permits
<Local Agency> shall be responsible for securing all applicable local permits for the project including but not limited to SEPA, building, right of way, grading, utility, shorelines and critical areas permits.

2.10 Financial Provisions
The County agrees to reimburse <Local Agency> on a monthly basis for approved direct costs and expenses invoiced during the previous month by the Contractor to the District per Exhibit A "Scope of Work." The reimbursed costs are not to exceed a total of _____ dollars ($_____) unless agreed to in writing by King County's program manager and <Local Agency>. Costs eligible for reimbursement are construction costs directly related to I/I removal within the scope of work of the project (Exhibit A), including but not limited to road overlay,

post-construction restoration and private property restoration. Construction work done in conjunction with I/I project work such as system or capacity upgrades or projects <Local Agency> wishes to include for its own purposes, such as separations of shared side sewers, will not be eligible for reimbursement from King County. Where storm drain disconnections from the sanitary sewer are necessary, the property owner shall be responsible for the re-routing of any disconnected and unauthorized drains. Costs to re-route storm drainage will not be eligible for reimbursement by the County. The County shall not pay <Local Agency> for costs and expenses attributed to consultant services, contract procurement, administration and management or non-I/I related construction activity. The County agrees to make payment within forty-five (45) days of billing by the <Local Agency>.

Note: Experience from the pilots indicates that financial responsibilities need to be established and agreed to by the Parties prior to beginning construction.

2.11 Pre and Post-Flow Monitoring

The County intends to conduct flow monitoring to quantify the effectiveness of the rehabilitation work performed within the project area. The flow monitoring may take place in multiple locations within the mini-basin both before and after I/I Control work has occurred. This work will occur between _____ and _____. The County agrees to share with <Local Agency> the results of all flow monitoring.

Addition to Section 3: Local Agency Responsibility of the Original Agreement

Section 3: Local Agency Responsibilities

3.7 Scope of Work

<Local Agency> will act as Lead Agency, and manage and administer the project. The project scope of work is attached hereto as Exhibit A "Scope of Work". If additional information is necessary to allow the project to function effectively, specific requests will be made in writing to <Local Agency>. A service map showing the area to be covered by this project is attached as part of Exhibit A.

Note: Some provision should be made to fix non-I/I related components when that is necessary to conduct I/I rehabilitation.

3.8 Entering Contracts with Contractor

<Local Agency> agrees to enter into contracts as necessary to complete the project per approved scope of work (Exhibit A). The County's consulting team will perform engineering and design oversight for bidding and engineering assistance to <Local Agency> and its consultants on the contractor hiring process. <Local Agency> will advertise in accordance with <Local Agency> procedures and will formulate bid tabs. The County will work with <Local Agency> if broader advertisement in national or out of state publications is desired. The County will print bid documents and <Local Agency> or its consultant will mail and distribute them.

3.9 Insurance

<Local Agency> shall require its contractor(s) to procure, maintain and provide evidence of coverage, including endorsements naming King County, its officers, officials, employees and agents as additional insured.

3.10 Contract Administration and Inspection

As the Lead Agency, <Local Agency> will be responsible for project inspection. <Local Agency> will provide a full time <Local Agency> Inspector with the authority to administer the contract. <Local Agency> will also designate an alternate <Local Agency> contact ("Alternate Inspector") with the authority to administer the contract in the absence of the <Local Agency> Inspector on site. King County or its designee inspector will be responsible for oversight inspection of the project in order to verify pay quantities and compliance with contract plans and specifications. Should the County representative identify a discrepancy or variance from the approved plans and specifications, the County representative shall contact the <Local Agency> Inspector first and if unavailable, then the Alternate Inspector second and the <Local Agency> designated third to implement the necessary correction. If the <Local Agency> Inspector, the Alternate Inspector and the <Local Agency> designated third are all unavailable, the King County representative shall have authority to administer the contract and implement the necessary corrective action. The <Local Agency> Inspector and Alternate Inspector(s) shall be trained in trenchless technology inspection.

Note: Project experience showed that lack of clear chain of command paths led to confusion and conflicts, therefore, this area needs to be clearly established.

3.11 Securing Private Property Side Sewer Replacement Agreements

a. <Local Agency> shall be responsible for securing all private property side sewer replacement agreements (right of entry) with property owners.
b. <Local Agency> or its Contractor shall obtain a release from the property owner upon completion of restoration. In the event <Local Agency> determines that the restoration work done by the Contractor is reasonable and in compliance with the terms of contract, then the requirement to obtain a release can be waived. Written documentation shall be provided to King County in any case where a waiver from the release provision is granted.

3.12 Program Funding/Record Keeping

a. <Local Agency> agrees to provide additional funds for this project. These additional funds will pay for all encumbrances associated with this project excluding costs associated with King County staff and its consultants. King County will reimburse <Local Agency> for up to $_____ for eligible construction costs associated with the project.
b. <Local Agency> shall maintain accounting records for work done on the project
c. As part of the County's I/I Program, <Local Agency> shall continue, through completion of the project even after the County's funds have been fully expended, to send monthly progress reports to the County detailing work accomplished and dollars spent on the project by contractors, <Local Agency> or its consultants. Accounting records shall include documentation of all costs related to the project, including but not limited to contractor costs, restoration costs, district staff labor and consultant labor and expenses.
d. For reimbursement of construction costs by King County, <Local Agency> shall review the Contractor's invoices and provide to the County a monthly progress report and pay request for approved project costs. Each progress report shall include a concise written summary of the work accomplished on the project during the past month. The pay request shall be based on a schedule of values for each work task to be performed. The pay request shall indicate the contract budget for each task, the percent complete at the end of

the month, the amount previously paid and the amount due for the current period including all change orders.

e. <Local Agency> shall maintain records in compliance with State of Washington financial audit requirements. For this project <Local Agency> is subject to an audit by the County.

3.13 Community Coordination and Communications

<Local Agency> and the County agree to jointly determine their roles for community coordination and communications for the project, and to jointly develop a public information/education plan for this project. The County agrees to assist in producing materials for public distribution.

Addition to Section 4: Indemnification of the Original Agreement

Section 4: Indemnification

4.3 <Local Agency> agrees to limit the County's liability for work or product to end at the end of the Contractor's warranty period.

<Use the "Modification to Section 7: Notice of the Original Agreement" that appears at the end of this document>

<Use the following Modifications and Insertions when the County is the Lead Agency>

1.9 Changes in Scope of Work, Cost and/or Conditions
The Parties agree that change orders for scope of work, costs, and/or for changes in conditions will be handled through use of an established change order process as approved in writing by King County.

1.10 Contract Administration and Inspection
As the Lead Agency, the County will be responsible for project inspection and will designate a Project Inspector and a Project Representative to administer the contract. <Local Agency> will designate its own oversight inspector for the project. Should the <Local Agency> representative identify a discrepancy or variance from the approved plans and specifications, the <Local Agency> representative shall contact the Project Inspector first and if unavailable, then the Project Representative second to implement the necessary correction. If the <Local Agency> representative notices a violation of safety or environmental protection requirements requiring immediate attention, they shall contact the Project Inspector first and if unavailable, then the Project Representative second to implement corrective action.

Note: Pilot project experience showed that lack of clear chain of command paths led to confusion and conflicts, therefore, this area needs to be clearly established.

1.11 Ownership of Improvements
There will be no changes in facilities ownership due to any project improvements made, even if the improvements are made to private property.

1.12 Associated Agencies
Both parties will take steps necessary to inform and include <Associated Agency> in I/I reduction projects, including <be specific - communications, approvals, and involvement>.

Note: This section was not included in the original IGA template or in the actual IGA's for the pilots and was recommended as a valuable addition.

Addition to Section 2: County Responsibility of the Original Agreement

Section 2: King County Responsibilities

2.5 Scope of Work
King County will act as Lead Agency, and manage and administer the project. The project scope of work is attached hereto as Exhibit A "Scope of Work." If additional information is necessary to allow the project to function effectively, specific requests will be made in writing to <Local Agency>. A service map showing the area to be covered by this project is attached as part of Exhibit A.

Note: Some provision should be made to fix non-I/I related components when that is necessary to conduct I/I rehabilitation.

2.6 Environmental Review Process

The County agrees to prepare an Environmental Review Document highlighting the I/I Program with specific information about this project. <Local Agency> agrees to review the document prior to distribution.

2.7 Securing Applicable Permits
King County shall be responsible for securing all applicable local permits for the project including, but not limited to, building, right of way, utility, shorelines and critical areas permits.

2.8 Post-Construction Flow Monitoring
The County agrees to conduct post-construction flow monitoring within the project area between <date> and <date>. The County agrees to share with <Local Agency> the results of this flow-monitoring period.

2.9 Entering Contracts with Contractor
King County agrees to enter into contracts with independent contractors as necessary to complete the project per approved scope of work (Exhibit A). The County's consulting team will perform engineering and design oversight for bidding and engineering on the contractor hiring process.

2.10 Insurance
King County shall require its contractor(s) to procure, maintain and provide evidence of coverage, including endorsements naming <Local Agency>, its officers, officials, employees and agents as additional insured.

Addition to Section 3: District Responsibility of the Original Agreement

Section 3: <Local Agency> Responsibilities

3.7 Securing Applicable Permits
<Local Agency> and King County agree to work cooperatively to secure all private property right of entry agreements with homeowners where necessary for the project. <Local Agency> agrees to accompany King County or its representative to meet with homeowners as necessary to explain the project and secure right-of-entry agreements.

3.8 Community Coordination and Communications
<Local Agency> and the County agree to jointly determine their roles for community coordination and communications for the project, and to jointly develop a public information/education plan for this project. The County agrees to assist in producing materials for public distribution.

3.9 Financial Provisions
The County agrees to pay for the work as detailed per Exhibit A “Scope of Work.” Costs eligible for County payment are construction costs directly related to I/I removal within the scope of work of the project (Exhibit A), including but not limited to road overlay, post-construction restoration and private property restoration. Construction work done in conjunction with I/I project work such as system or capacity upgrades or projects <Local Agency> wishes to include for its own purposes such as separations of shared side sewers will not be eligible for King County payment. Where storm drain disconnections from the sanitary sewer are necessary,

the property owner shall be responsible for the re-routing of any disconnected and unauthorized drains. Costs to re-route storm drainage will not be eligible for County payment. The County will not pay for costs and expenses attributed to consultant services, contract procurement, administration and management or non-I/I related construction activity.

Note: Experience from the pilots indicate that financial responsibilities need to be established and agreed to by the Parties prior to beginning construction

<Use the "Modification to Section 7: Notice of the Original Agreement" that appears at the end of this document>

<Use this section when either the Local Agency or the County is the Lead Agency>

Modification to Section 7: Notice of the Original Agreement

Section 7: Notice

All Notices to the County or <Local Agency> required under terms of the Agreement and this Amendment shall be given in writing as follows:

To the County:
King County Department of Natural Resources and Parks
Wastewater Treatment Division
201 South Jackson St., MS KSC-NR-0512
Seattle, WA 98104
Attn: , Program Manager
Telephone: _____
Fax: _____

To <Local Agency>:
<Local Agency>
Address
Attn:
Telephone: _____
Fax: _____

IN WITNESS WHEREOF, the Parties have executed this Amendment No.1 to the Agreement for Infiltration/Inflow Program as of the date and year first written above.

<Local Agency>
Approved as to Form:

, Attorney
Representing <Local Agency>

<Local Agency>
Representing <Local Agency>

KING COUNTY
Approved as to Form:

Attorney WSBA #
Prosecuting Attorney

Director
Department of Natural Resources and Parks Approved as to Form:

<u>Exhibit A:</u> Project Scope of Work and Schedule

<u>Exhibit B</u>: Project Cost Estimate and Regional I/I Control Program Contribution

Exhibit B is only applicable if the Local Agency is the Lead Agency.

Guidance Table for Regional I/I Control Program Items

This Table is intended as a guide to what should or should not be considered eligible for Regional I/I Control Program funding.

ITEM	√ ELIGIBLE	√ INELIGIBLE	COMMENTS
Staff and administration time **directly** related to the I/I Reduction Project, including salaries, wages, payroll expenses 1. Staff time or, 2. Staff time up to maximum or, 3. Staff time up to some percentage (say 10%)	√		
Staff and administration time **indirectly** related to the I/I Reduction Project, including salaries, wages, payroll expenses 1. Staff time or, 2. Staff time up to maximum or, 3. Staff time up to some percentage (say 10%)		√	
I/I Project related travel and transportation	√		Per mile using federal standard, if directly related to Local Agency costs
General administrative and other overhead costs (non-labor)		√	
Invoice preparation/Budget tracking/Process reports	√		Related to the project
Interest and other financial costs. Interest on borrowings (however represented), bond discounts, cost of financing and refinancing operations.		√	
Legal and other professional fees paid in connection with the I/I Reduction Project	√		After agreement
Project related audit expenses performed in accordance with generally accepted auditing standards and King County Auditing Requirements	√		Project specific audit
Public involvement as approved in a Public Involvement Plan	√		
Permit fees	√		
Preparation and costs associated with obtaining required federal/state/local regulatory approval	√		
Property acquisition necessary for project	√		Only if directly needed for I/I control
Condemnation	√		
Predesign, investigations and design engineering services	√		
Value engineering	√		If required

Partnering session(s)	√		If needed
Advertising and Bidding	√		
Inspection as per standards	√		
Any expenses prior to IGA effective date		√	
Post inspection as per standards	√		
Signed construction contract amount	√		
Project site restoration that is beyond actual I/I reduction need and/or beyond agreed to standards, procedures, and policies			Is eligible if added as a permit condition
Change orders	√		Available up to project funding limits
Storm water facilities necessary to handle removed I/I			If part of scope of work as indicated in Exhibit A
I/I project additions by Local Agency/Associated Agency not indicated in standards and procedures and policies			Negotiated between County and Local Agency
Additions by Local Agency/Associated Agency not directly affiliated with I/I reduction		√	
Utility relocations necessary for I/I Reduction Projects as specified by the standards			If part of scope of work as indicated in Exhibit A
Other costs allowable subject to King County's approval. Although some category of expenditures are not mentioned specifically, should the Local Agency wish to seek King County participation, it is allowed to request approval from King County. If they agree to pay for that item, that would set a precedent for other projects. The expenditures that relate to the I/I Reduction Project should be well identified through proper documentation.			Negotiation or part of IGA
Bad debts. Any losses arising from uncollectable accounts and other claims and related costs.	√	√	If Local Agency or King County error, not eligible. If part of project and not covered by insurance, will be covered
Contributions and donations.		√	
Entertainment. Costs of amusements, social activities, and incidental costs relating thereto, such as meals, beverages, lodgings, rentals, transportation, and gratuities.		√	
Fines and penalties. Costs resulting from violations of or failure to comply with federal, state, and local laws and regulations.	√	√	Eligible if part of I/I reduction project and not covered by insurance

Legislative expenses. Salaries and other expenses of the state legislature or similar local governmental bodies, such as county supervisors, city councils, school boards, etc., whether incurred for purposes of legislation or executive direction, are unallowable.		√	
Liability judgments against the Local Agency.	√	√	Eligible if part of I/I reduction project and not covered by insurance

MWPAAC Engineering & Planning Subcommittee

FINAL DRAFT

Appendices

APPENDIX A

SUMMARY OF REVISIONS TO DRAFT STANDARDS AND GUIDELINES

BASED ON MWPACC ENGINEERING AND PLANNING SUBCOMMITTEE INPUT

Standard/Guideline Title & Description of Subcommittee Decision for October 21, 2002 Working Draft	Implementation of Standard/Guideline on Pilot Projects and Lessons Learned	Proposed Revisions Based on Lessons Learned from Pilot Projects June 9, 2004	Subcommittee Input and Final Decision October 19, 2004
PS–1: Storm Drainage Connections to the Sanitary Sewer Conclusion for Working Draft ACCEPTABLE as standard.	• Storm drainage connections to the sanitary sewer are only acceptable under special circumstances, such as runoff collected from areas subject to high pollutant loading.	No revisions proposed.	No changes made to October 21, 2002 Working Draft Standard.
PS-2: Design Capacity for Pipeline Rehabilitation Projects Conclusion for Working Draft ACCEPTABLE as standard.	• Pilot project designs did not include rehabilitation methods that would result in significant loss in hydraulic capacity, such as for a slip-lining project.	No revisions proposed.	No changes made to October 21, 2002 Working Draft Standard.
PS-3: Visual Inspection of Manholes for SSES Investigations Conclusion for Working Draft ACCEPTABLE as guideline.	• Significant sources of I/I can be missed if manhole inspections are performed during dry periods when groundwater levels are low.	• Recommend inspection during the wet season. "Wet season" to be defined as December 1st through February 28th. • Added inspection components to the investigation.	• Keep as guideline – Local Agencies do not want mandate; want to retain original MWPAAC Committee's decisions. • Include "Surface visual inspection of

Standard/Guideline Title & Description of Subcommittee Decision for October 21, 2002 Working Draft	Implementation of Standard/Guideline on Pilot Projects and Lessons Learned	Proposed Revisions Based on Lessons Learned from Pilot Projects June 9, 2004	Subcommittee Input and Final Decision October 19, 2004
		• Revise from a guideline to a standard.	manhole is acceptable unless I/I is apparent" or similar language.
PS-4: Closed Circuit Television (CCTV) Inspection of Sewers for SSES Investigations Conclusion for Working Draft ACCEPTABLE as guideline.	• Significant sources of I/I can be missed if CCTV inspection of pipelines is performed during dry periods.	• Recommend inspection during peak of the wet season. "Wet season" to be defined as December 1st through February 28th. • Revise from a guideline to a standard.	• Keep as guideline • Add recommendation of CCTV during saturated conditions. • Add classification for severity of I/I from a given leak.
PS-5: Smoke Testing for SSES Investigations Conclusion for Working Draft ACCEPTABLE as guideline.	• Guideline applied during SSES investigations for pilot projects. No significant problems encountered.	No revisions proposed.	No changes made to October 21, 2002 Working Draft Guideline.
PS-6: Dye Testing for SSES Investigations Conclusion for Working Draft ACCEPTABLE as guideline.	• Guideline applied during SSES investigations on several pilot projects. Appropriate agencies need to be notified of dye testing.	• Require notification of impending testing to the appropriate agencies.	Proposed change accepted.
PS-7: Modeling and Engineering Analysis Conclusion for Working Draft ACCEPTABLE as guideline.	• Modeling of local agency sewer system not performed as part of the pilot project design.	No revisions proposed.	No changes made to October 21, 2002 Working Draft Guideline.
PUB-1: Connections to Existing System Conclusion for Working Draft ACCEPTABLE as standard.	• Connection of new system to existing sewer system not included in pilot projects.	No revisions proposed.	No changes made to October 21, 2002 Working Draft Standard.
PUB-2: Sewers on Steep Slopes Conclusion for Working Draft ACCEPTABLE as standard.	• No sewers on steep slopes included in pilot projects.	No revisions proposed.	No changes made to October 21, 2002 Working Draft Standard.

Standard/Guideline Title & Description of Subcommittee Decision for October 21, 2002 Working Draft	Implementation of Standard/Guideline on Pilot Projects and Lessons Learned	Proposed Revisions Based on Lessons Learned from Pilot Projects June 9, 2004	Subcommittee Input and Final Decision October 19, 2004
PUB-3: Manhole Location and Covers Conclusion for Working Draft ACCEPTABLE as standard.	• Manhole modifications included in multiple pilot projects where the cover was subject to channelized stormwater flows and potential inundation.	No revisions proposed.	No changes made to October 21, 2002 Working Draft Standard.
PUB-4: Manhole Size Conclusion for Working Draft ACCEPTABLE as standard.	• New manholes installed as part of pilot projects followed standard spacing protocol between knockouts in accordance with WSDOT/APWA standards.	No revisions proposed.	No changes made to October 21, 2002 Working Draft Standard.
PUB-5: Manhole Joints Conclusion for Working Draft ACCEPTABLE as standard.	• Standard for manhole joints implemented where new manholes installed as part of pilot projects.	No revisions proposed.	No changes made to October 21, 2002 Working Draft Standard.
PUB-6: Side Sewer Connection Location & Taps Conclusion for Working Draft ACCEPTABLE as standard.	• Standard applied on pilot projects without any significant problems. Connections to high density polyethylene (HDPE) mains not addressed in the standard.	• Added requirement that taps to HDPE sewer mains to be made with a welded saddle connection.	• Other adequate means of making the connection to HDPE besides a welded connection are available. Delete the requirement. • Revise "…protrude" sentence (4th bullet) to address hammer taps specifically OR to adhere to Local Agency requirements.
PUB-7: Sewer System Design Conclusion for Working Draft ACCEPTABLE as standard.	• All pilot projects designed and stamped by licensed civil engineer.	No revisions proposed.	No changes made to October 21, 2002 Working Draft Standard.
PUB-8: Abandonment	• No abandonment of mains	No revisions proposed.	No changes made to October

Standard/Guideline Title & Description of Subcommittee Decision for October 21, 2002 Working Draft	Implementation of Standard/Guideline on Pilot Projects and Lessons Learned	Proposed Revisions Based on Lessons Learned from Pilot Projects June 9, 2004	Subcommittee Input and Final Decision October 19, 2004
Requirements Conclusion for Working Draft ACCEPTABLE as standard.	or manholes implemented as part of the pilot projects.		21, 2002 Working Draft Standard.
PUB-9: Pipe Rehabilitation Methods Conclusion for Working Draft ACCEPTABLE as guideline.	• Standard referenced the "Green Book" Standard Specifications for Public Work Construction for pipe bursting, CIPP lining and fold and form. Specifications for these rehabilitation methods were developed and implemented during design of the pilot projects. Lessons learned during the construction were incorporated into a set of Guide Specifications for these rehabilitation methods. • Numerous storm drain connections to side sewers were discovered during the course of pipe bursting work on private property. • Reinstated lateral connections on CIPP projects were found to have substantial I/I unless they were grouted or lined.	• Require pipe bursting, CIPP lining, and folded/formed liners to meet the requirements of King County Regional Inflow and Infiltration Control Program Guide Specifications. • Require disconnection of any storm drain to sewer system connections discovered during the course of pipe bursting work. • Added requirement that service connections on lined mains need be made watertight by grouting lining or installing a service connection rehabilitation liner. • Deleted requirements to spray on lining for rehabilitation of large diameter pipe since it will rarely be used. • Revise from a guideline to a standard.	• Keep as guideline. • Guide specifications should require a ball test. • Move 2nd bullet under Pipe Bursting elsewhere. • Consider rewrite, or changing opening paragraph.
PUB-10: Manhole Rehabilitation Conclusion for Working Draft ACCEPTABLE as guideline.	• Specifications for manhole rehabilitation, including chemical grouting, spray on coatings and cure-in-place	• Require chemical grouting, spray on coatings and cure-in-place linings for manholes to meet the requirements of King County	• Keep as guideline.

Standard/Guideline Title & Description of Subcommittee Decision for October 21, 2002 Working Draft	Implementation of Standard/Guideline on Pilot Projects and Lessons Learned	Proposed Revisions Based on Lessons Learned from Pilot Projects June 9, 2004	Subcommittee Input and Final Decision October 19, 2004
	linings were developed and implemented during design of the pilot projects. Lessons learned during the construction were incorporated into a set of Guide Specifications for these manhole rehabilitation methods.	Regional Inflow and Infiltration Control Program Guide Specifications. • Revise from a guideline to a standard.	
PUB-11: Spot Repairs Conclusion for Working Draft ACCEPTABLE as guideline.	• Some of the pipe repair couplings specified on the pilot projects were expensive, not readily available, or did not provide an adequate fit to the host pipe. • Spot repairs on pipes were very expensive because of the time required to mobilize and set up to perform the repair. The economy of performing a spot repair vs. rehabilitating an entire run of pipe was quickly lost if there were three or more spot repairs to perform on a run of pipe.	• Delete some of the requirements on couplings. Require repair couplings that are approved by the local agency that provide a water tight repair. • Recommend that the entire run of pipe be rehabilitated if 3 or more spot repairs are required. • Revise from a guideline to a standard.	• Keep as guideline. • For this and all standards, address cost effectiveness of different techniques if information is available.
PUB-12: Manhole Leveling Rings Conclusion for Working Draft ACCEPTABLE as standard.	• Standard was implemented on pilot projects where new manholes were installed and where rehabilitation of the leveling was required on existing manholes.	• Minor editorial revisions and delete reference to pavement patch material.	Proposed changes accepted.
PUB-13: Manhole Lids/Inserts Conclusion for Working Draft	• Standard applied on pilot projects. Manhole pans used in lieu of gasketed solid cover.	• Standard detail revised to note that manhole pans are not appropriate for use with locking	Proposed changes accepted.

Standard/Guideline Title & Description of Subcommittee Decision for October 21, 2002 Working Draft	Implementation of Standard/Guideline on Pilot Projects and Lessons Learned	Proposed Revisions Based on Lessons Learned from Pilot Projects June 9, 2004	Subcommittee Input and Final Decision October 19, 2004
ACCEPTABLE as standard.	• Manhole pans did not work with locking frame and cover.	frame and cover.	
PUB-14: Root Intrusion Conclusion for Working Draft ACCEPTABLE as standard.	• Root intrusion in sewer mains, laterals and side sewers turned out to be significant locations of infiltration into the system in the Kent, Mercer Island and Lake Forest Park pilot projects.	• Remove the clause that I/I be removed at locations of root intrusion "if it can be done so cost effectively". • Remove paragraph referencing spot repairs. Spot repairs are addressed elsewhere in the standards.	• 1st bullet, 2nd sentence: change "it shall be removed" to "it shall be evaluated for removal during the wet season." • Drop "that have been identified through SSES" from next sentence. • Drop last bullet.
PUB-15: Pipeline Leak Testing Conclusion for Working Draft ACCEPTABLE as standard.	• Leakage in rehabilitated pipelines was not evident unless the CCTV inspection was performed during the wet season.	• Require that CCTV inspections that are performed in lieu of air or water testing be performed during the wet season. • "Wet season" to be defined as December 1st through February 28th.	• Change "shall" to "recommendation" in last bullet. • Change definition of "wet season" dates.
PUB-16: Manhole Leak Inspection Conclusion for Working Draft ACCEPTABLE as standard.	• Leakage in rehabilitated manholes was not evident unless the visual inspection was performed during the wet season.	• Require that visual inspections be performed during the wet season. • "Wet season" to be defined as December 1st through February 28th.	• Remove reference to substantial completion from first sentence. • Change to recommendation of inspection during the wet season in last sentence.
PUB-17: CCTV Inspection Conclusion for Working Draft ACCEPTABLE as standard.	• Video inspections performed on all new and rehabilitated sewer mains and laterals on the pilot projects.	No revisions proposed.	No changes made to October 21, 2002 Working Draft Standard.
PUB-18: Inspection of Pipe	• Nearly full time inspection	• Require that a minimum of	• Last bullet: change

Standard/Guideline Title & Description of Subcommittee Decision for October 21, 2002 Working Draft	Implementation of Standard/Guideline on Pilot Projects and Lessons Learned	Proposed Revisions Based on Lessons Learned from Pilot Projects June 9, 2004	Subcommittee Input and Final Decision October 19, 2004
Installation and Backfill Conclusion for Working Draft ACCEPTABLE as standard.	performed on all the pilot projects. The inspection was critical to ensuring conformance with the specifications.	10% of the pipe length be inspected.	"shall" to "should".
PUB-19: Product Specific Inspection Conclusion for Working Draft ACCEPTABLE as standard.	• There were a number of instances on the pilot projects where field crews tried deviating from approved manufacturers' installation recommendations. Inspection was required to ensure conformance.	• Minor editorial revision proposed.	Revision accepted.
PUB-20: Certification, Warranty and Qualifications Conclusion for Working Draft ACCEPTABLE as guideline.	• Manufacturer certifications were required for rehabilitation products on the pilot projects. The requirement for certification ensured a vested interest by the product manufacturers. • Warranty requirements provided for the complete replacement of products or systems in the event of failure. • Specifications for each of the pilot projects included qualification requirements for potential bidders. These requirements helped ensure proven products were installed by contractors with the necessary qualifications.	• Minor editorial revisions. • Revise from a guideline to a standard.	• Keep as guideline. • Editorial revisions accepted.

Standard/Guideline Title & Description of Subcommittee Decision for October 21, 2002 Working Draft	Implementation of Standard/Guideline on Pilot Projects and Lessons Learned	Proposed Revisions Based on Lessons Learned from Pilot Projects June 9, 2004	Subcommittee Input and Final Decision October 19, 2004
PRV 1: Pipe Protection-Depth of Cover Conclusion for Working Draft ACCEPTABLE as guideline.	• Damage leading to I/I was found on shallow buried pipe. Side sewers appeared to be damaged from activities such as construction of fence posts and installation of shallow utilities like gas services.	• Revise from a guideline to a standard.	• Keep as guideline.
PRV 2: Allowable Connections to Side Sewer Conclusion for Working Draft ACCEPTABLE as standard.	• Numerous storm drain connections to side sewers were discovered during the course of pipe bursting work on private property.	No revisions proposed.	No changes made to October 21, 2002 Working Draft Standard.
PRV 3: Pipe Zone Bedding and Trench Backfill Conclusion for Working Draft ACCEPTABLE as guideline.	• Aged and unsuitable pipe materials and pipe installation techniques were likely causes of I/I in the laterals and side sewers rehabilitated in Kent, Kirkland, Ronald and Skyway.	• Revise from a guideline to a standard. • Allow deviation from the standard requirements if written recommendations are provided by the pipe manufacturer.	• Keep as guideline. • Revisions accepted.
PRV 4: Pipe Materials Conclusion for Working Draft ACCEPTABLE as guideline.	• Aged and unsuitable pipe materials and pipe installation techniques were likely causes of I/I in the laterals and side sewers rehabilitated in Kent, Kirkland, Ronald and Skyway.	• Revise from a guideline to a standard.	• Keep as guideline.
PRV 5: Inspection Wyes/Cleanouts Conclusion for Working Draft ACCEPTABLE as standard. Revisit this standard when the Standard Detail(s) SS-1 and SS-3	• Cleanouts were installed on private property for each of the private property pilot projects. • Cleanouts were often strategically located to avoid	• Require cleanout placement 2 feet to 5 feet from the face of the building on new installation only. • For rehabilitation projects, require inspection wye/cleanout placement within 2 feet of the	Revisions accepted.

Standard/Guideline Title & Description of Subcommittee Decision for October 21, 2002 Working Draft	Implementation of Standard/Guideline on Pilot Projects and Lessons Learned	Proposed Revisions Based on Lessons Learned from Pilot Projects June 9, 2004	Subcommittee Input and Final Decision October 19, 2004
are further reviewed.	damage to surface improvements such as driveways and landscaping. In some cases, the cleanouts were not installed within 5 feet of the face of the building.	termination of the rehabilitation.	
PRV-6: Lateral and Side Sewer Rehabilitation Methods Conclusion for Working Draft ACCEPTABLE as guideline.	• Standard referenced the "Green Book" Standard Specifications for Public Work Construction for pipe bursting, CIPP lining and fold and form. Specifications for these rehabilitation methods were developed and implemented during design of the pilot projects. Lessons learned during the construction were incorporated into a set of Guide Specifications for these rehabilitation methods. • Numerous storm drain connections to side sewers were discovered during the course of pipe bursting work on private property.	• Require pipe bursting, CIPP lining, and folded/formed liners to meet the requirements of King County Regional Inflow and Infiltration Control Program Guide Specifications. • Require disconnection of any storm drain to sewer connections discovered during the course of pipe bursting work. • Revise from a guideline to a standard.	• Keep as guideline. • Rewrite or move "storm drain" language (also in PUB-9).
PRV-7: Spot Repairs Conclusion for Working Draft ACCEPTABLE as standard.	• Spot repairs were not generally used for private property rehabilitation. Rehabilitation of the entire lateral/side sewer was typically more economical that a spot repair.	• Remove several of the requirements on repair clamps. Require connections be made with approved repair couplings. • Remove requirement that the entire side sewer pass a pressure test, when only a spot repair is	Revisions accepted.

Standard/Guideline Title & Description of Subcommittee Decision for October 21, 2002 Working Draft	Implementation of Standard/Guideline on Pilot Projects and Lessons Learned	Proposed Revisions Based on Lessons Learned from Pilot Projects June 9, 2004	Subcommittee Input and Final Decision October 19, 2004
		performed.	
PRV-8: Root Intrusion Conclusion for Working Draft ACCEPTABLE as standard.	• Root intrusion in laterals and side sewers turned out to be significant locations of I/I into the system in the Kent pilot project.	• Require that rehabilitation work performed on laterals and side sewers that utilizes public resources address removal of roots and repair of the pipe at the point of root intrusion.	• Change "…shall be addressed by removal of the roots…" to "…shall be addressed by evaluating removal of the roots…"
PRV-9: Side Sewer/Lateral Leak Testing Conclusion for Working Draft ACCEPTABLE as standard.	• Requirements for an air or water test were included in the specifications on the pilot projects. • The requirements were relaxed on several pipe bursting projects after several initial successful tests because of the logistical problems of testing a pipe that needs to be placed back in service.	• Minor editorial revisions. • King County Regional Inflow and Infiltration Control Program Guide Specifications allow some testing flexibility for pipe bursting and CIPP lining rehabilitation based on the quality of the contractor's work. • The inspection for leakage shall be performed during the wet season. "Wet season" to be defined as December 1st through February 28th.	• Clarify location for CCTV testing, e.g. "CCTV from point of connection."
PRV-10: Sanitary Side Sewer Inspection Conclusion for Working Draft ACCEPTABLE as guideline.	• Open cut replacement/installation of pipe and cleanouts was inspected prior to being backfilled.	• Revise from a guideline to a standard.	• Keep as guideline.
PRV-11: Sanitary Side Sewer CCTV Requirements Conclusion for Working Draft ACCEPTABLE as standard.	• Video inspection of the connection of new and rehabilitated laterals/side sewers to the sewer main was performed on the pilot projects.	• Minor editorial revisions.	Revisions accepted.

Standard/Guideline Title & Description of Subcommittee Decision for October 21, 2002 Working Draft	Implementation of Standard/Guideline on Pilot Projects and Lessons Learned	Proposed Revisions Based on Lessons Learned from Pilot Projects June 9, 2004	Subcommittee Input and Final Decision October 19, 2004
PRV-12: Product Specific Inspection Conclusion for Working Draft ACCEPTABLE as standard.	• There were a number of instances on the pilot projects where field crews tried deviating from approved manufacturers' installation recommendations. Inspection was required to ensure conformance.	• Minor editorial revisions.	Revisions accepted.
PRV-13: Product Specific Certification Conclusion for Working Draft ACCEPTABLE as standard.	• Manufacturer certifications were required for rehabilitation products on the pilot projects. The requirement for certification ensured a vested interest by the product manufacturers.	No revisions proposed.	No changes made to October 21, 2002 Working Draft Standard.
PRV-14: Bonding and Warranty Inspection Conclusion for Working Draft ACCEPTABLE as standard.	• Warranty requirements provided for the complete replacement of products or systems in the event of failure. • Warranty inspection of the pilot projects to be performed by the County during the 2004/05 wet season.	• Minor editorial revisions.	Revisions accepted.

Standard Detail Number & Title	Implementation of Standard Detail on Pilot Projects and Lessons Learned	Proposed Revisions	Subcommittee Input and Final Decision
SS-1: Side Sewer Installation	• Cleanouts installed on private property in conformance with Detail A/SS-4	• Remove requirement for a cleanout at the property line. • Removed reference to deleted standard at side sewer connection location.	Revisions accepted.
SS-2: Lateral Inspection Wye/Cleanout	• Cleanouts were originally required at property line on pipe bursting projects. Requirement was deleted because of the large increased cost and disruption to install the cleanout.	• Delete the detail.	Deletion accepted.
SS-3: Lateral Inspection Wye/Cleanout	• Cleanouts were originally required at property line on pipe bursting projects. Requirement was deleted because of the large increased cost and disruption to install the cleanout.	• Delete the detail.	Deletion accepted.
SS-4: Side Sewer Inspection Wye/Cleanout	• Cleanouts were often strategically located to avoid damage to surface improvements such as driveways and landscaping. In some cases, the cleanouts were not installed within 5 feet from the face of the building. • Cleanouts were buried below grade if requested by the property owner.	• Require cleanout installation within 5 feet of the building for new construction only. • For rehabilitation projects, require inspection wye/cleanout within 2 feet of the termination rehabilitation. • Allow cleanouts to be buried up to 6-inches below grade.	• Double sweep T can be wye with 45 degree angle. • Detail renumbered. Now SS-2.

Standard Detail Number & Title	Implementation of Standard Detail on Pilot Projects and Lessons Learned	Proposed Revisions	Subcommittee Input and Final Decision
SS-5: Lateral/Side Sewer Connection	• Detail used on open cut installation of laterals on Kirkland pilot project.	• Delete note requiring installation of cleanout at property line.	• Delete entire detail. After deleting cleanout at property line, the detail no longer addresses any I/I control issues.
SS-6: Vertical Lateral/Side Sewer Connection	• No vertical connections incorporated on pilot projects.	No revisions proposed.	• Detail renumbered. Now SS-3.
MH-1: Manholes—New Construction	• Detail used on several pilot projects where new manholes were installed.	No revisions proposed.	• Add note on how to deal with lifting holes (suggest sand / mortar, rather than epoxy)
MH-2: Manholes—Grade Rings and Steps	• Detail used on several pilot projects where new manholes were installed, and where frame and cover was raised to grade.	• Delete the requirement for a preformed concrete joint sealant gasket. These are not available.	Revisions accepted.
MH-3: Manholes Cover Insert	• Detail used on several pilot projects where manholes inserts were installed. • Inserts did not fit where existing manhole had a locking frame and cover.	• Add a note indicating that inserts are not appropriate for use on manholes with locking frame and cover.	Revisions accepted.
S-1: Sewer—Pipe Zone Bedding	• Detail incorporated on open cut installation of sewers and laterals.	No revisions proposed.	No changes made to October 21, 2002 Working Draft Detail.

APPENDIX B

The table below documents the revisions to the Policies that the Earth Tech consultant team proposed after the pilot projects were completed, and the comments and decisions made by the E&P Subcommittee. Specifically, the table presents:

First column: Original, MWPAAC-accepted working draft Policies (October 21, 2002);
Second column: Lessons learned from the pilot projects and revisions to the working draft Policies proposed by the Earth Tech consultant team, with input from King County;
Third column: Revised draft Policies that the Earth Tech consultant team, with input from King County, proposed to the E&P Subcommittee (2004); and
Fourth column: Comments and decisions made by the E&P Subcommittee about the proposed revised draft Policies (2004).

Regional I/I Control Program

Proposed and Adopted Revisions to Policies that Support Standards & Procedures

Original Working Draft Policies (October 21, 2002)	**◊ Pilot Project Lessons Learned Related to Policies that Support the Standards and Procedures** **◊ Editing and Policy Combinations**	**Revised Draft Policies Proposed to the E & P Subcommittee**	**E & P Subcommittee Input and Decision**
Policy #1 Public funding may be made available for all phases of I/I mitigation work on all privately owned property including residential, commercial and industrial land uses. Funded work could include scope of work elements such as: permits, investigation, inspection and	• The pilot projects used public funding on private property for all aspects of I/I reduction projects. • Assumes that actual I/I Control Program will be legally allowed to provide public funding on private property.	Proposed Policy #1 Public funding should be made available for all phases of I/I mitigation work on all privately owned property including residential, commercial and industrial land uses. Funded work should include scope of work elements such as: permits, investigation, inspection and	General Policy Comment: Clarify when/how these policies will go into effect. Change first sentence to: "Public funding should be considered for all phases of I/I mitigation work on privately owned property."

Original Working Draft Policies (October 21, 2002)	◊ Pilot Project Lessons Learned Related to Policies that Support the Standards and Procedures ◊ Editing and Policy Combinations	Revised Draft Policies Proposed to the E & P Subcommittee	E & P Subcommittee Input and Decision
testing, any modifications to the side sewer connections and laterals, connections to public systems, restoration of disturbed areas (including landscaping, sidewalks, driveways, and rights-of-way) and post-rehabilitation testing and enforcement. Environmentally infeasible &/or prohibitively expensive modifications would be considered for variances/waivers.		testing, any modifications to the side sewer connections and laterals, connections to public systems, restoration of disturbed areas (including landscaping, sidewalks, driveways, and rights-of-way) and post-rehabilitation testing and enforcement. Environmentally infeasible &/or prohibitively expensive modifications should be considered for variances/waivers.	
<u>Policy #2</u> King County would create and promote regional educational programs to catch the attention of the general public, to introduce the public to I/I as an issue and to explain the potential benefits from I/I mitigation efforts.	• King County produced materials related to the I/I Program for use with the pilot projects (see Attachment A for example used on pilot project).	Combine into Proposed Policy #2 (see below)	
<u>Policy #3</u> King County would provide to the Local Agencies educational and informational materials pertaining to Regional I/I Control that could be modified and used by each local jurisdiction to meet their local needs.	• Some of the materials produced by King County were modified by the Local Agency, usually with an additional logo (See Attachment A for example used on pilot project).	Combine into Proposed Policy #2 (see below)	
<u>Policy #4</u> King County would establish a	• The County has been functioning in this role since	Combine into Proposed Policy #2 (see below)	

Original Working Draft Policies (October 21, 2002)	◊ Pilot Project Lessons Learned Related to Policies that Support the Standards and Procedures ◊ Editing and Policy Combinations	Revised Draft Policies Proposed to the E & P Subcommittee	E & P Subcommittee Input and Decision
central clearinghouse to respond to queries about policies and other general issues regarding the Regional I/I Program.	this draft policy was developed including inquiries from agencies, from individuals, as well as from national information requests.		
Combine old Policies 2, 3 and 4		Recommend combining Policies 2, 3 and 4 into one policy <u>Proposed Policy #2</u> King County shall create and promote regional educational programs to introduce the general public to I/I as an issue, to explain the potential benefits from I/I mitigation efforts, and to inform the public of their responsibilities related to the I/I problem. Educational/informational materials shall be designed such that each local jurisdiction will be able to modify them to meet their local needs. Additionally, King County shall function as a central clearinghouse in responding to inquiries about the Regional I/I Control Program.	1st sentence: "King County in conjunction with the Local Agencies shall…" NOTE: Public's "responsibilities" must be related only to existing laws, not to any additional I/I reduction/control activities.
<u>Policy #5</u> For the community involvement elements of each specific I/I control project, the Local Agency would take on the primary	• For the pilot projects in which King County was the Lead Agency, Local Agencies wanted King County to be the responder to public questions and concerns.	Combine into Proposed Policy #3 (see below)	

Original Working Draft Policies (October 21, 2002)	◊ Pilot Project Lessons Learned Related to Policies that Support the Standards and Procedures ◊ Editing and Policy Combinations	Revised Draft Policies Proposed to the E & P Subcommittee	E & P Subcommittee Input and Decision
oversight responsibility. If King County were the project's manager, specific roles and responsibilities would be established in an Appendix to the pertinent Intergovernmental Agreement.			
<u>Policy #6</u> For specific projects, each Local Agency would respond to individual's concerns even if the project were being managed by King County. The specific parameters for communication and coordination between the County and the Local Agency would be documented in the pertinent Interlocal Governmental Agreement.	• For the pilot projects in which King County was the Lead Agency, Local Agencies wanted King County to be the responder to public questions and concerns.	Combine into Proposed Policy #3 (see below)	
Combine old Policies 5 and 6	• The pilot projects showed that community education and involvement are necessary components of I/I reduction projects. A plan for appropriate public education and involvement should be considered in the project planning stages.	Recommend combining Policies 5 and 6 into one policy <u>Proposed Policy #3</u> For each specific I/I reduction project being led by a Local Agency, the Local Agency shall be responsible for community education/involvement. If King County is the Lead Agency, the County shall be responsible for community	Add "unless otherwise specified or negotiated in the IGA…" at the beginning of each sentence.

Original Working Draft Policies (October 21, 2002)	◊ Pilot Project Lessons Learned Related to Policies that Support the Standards and Procedures ◊ Editing and Policy Combinations	Revised Draft Policies Proposed to the E & P Subcommittee	E & P Subcommittee Input and Decision
		education/involvement.	
Policy #7 Code Compliance Investigation. If permitted by law, districts and cities would grant representative(s) of their utility the authority to enter all premises, including buildings and structures, to which sewer service is provided.	• In the pilot projects, access to private property was important for both private property facility rehabilitation and for work on public sewers on private property that needed construction easements. • Such access is paralleled by power companies, gas companies, and other utility services that need access to private property to provide a particular service.	Combine into Proposed Policy #4 (see below)	
Policy #8 Code Enforcement. Local Agencies would pass an ordinance granting authority for physical action to be taken by the Agencies' representative(s) on private property – which may range from a right of entry agreement, a temporary use or construction easement, to a variety of legal notices and sanctions.	• In the pilot projects, access to private property was important for both private property facility rehabilitation and for work on public sewers on private property that needed construction easements. • Such access is paralleled by power companies, gas companies, and other utility services that need access to private property to provide a particular service.	Combine into Proposed Policy #4 (see below)	
Policy #9 Code Enforcement. King County	• In the pilot projects, access to private property was important for both private property	Combine into Proposed Policy #4 (see below)	

Original Working Draft Policies (October 21, 2002)	◊ Pilot Project Lessons Learned Related to Policies that Support the Standards and Procedures ◊ Editing and Policy Combinations	Revised Draft Policies Proposed to the E & P Subcommittee	E & P Subcommittee Input and Decision
would pass an ordinance granting authority for physical action to be taken by King County and the Local Agencies' representative(s) on private property. Action may range from a right of entry agreement, a temporary use or construction easement, to a variety of legal notices and sanctions.	facility rehabilitation and for work on public sewers on private property that needed construction easements. • Such access is paralleled by power companies, gas companies, and other utility services that need access to private property to provide a particular service. • On projects where King County was the lead, the King County also needed to obtain access to private property.		
Combine old Policies 7,8,9,11, and 15	• This new policy combines several old overlapping policies and focuses the issue of access on reduction and control needs and activities related to I/I.	Recommend combining Policies 7, 8, 9, 11, and 15 into one policy <u>Proposed Policy #4</u> Both the Local Agency and King County shall pass the necessary ordinances and develop the appropriate access agreements that allow each agency to gain access to private property, such as a right of entry or a construction and inspection easement. These agreements will allow certain actions related to I/I reduction and control, such as conducting a side sewer and/or lateral inspection; construction rehabilitation; or conducting code enforcement	Drop “and King County” from 1st sentence. Change “ordinances” to “ordinances/resolutions” Change “allow each agency to gain access” to “allow each agency or its agents to gain access”

Original Working Draft Policies (October 21, 2002)	◊ Pilot Project Lessons Learned Related to Policies that Support the Standards and Procedures ◊ Editing and Policy Combinations	Revised Draft Policies Proposed to the E & P Subcommittee	E & P Subcommittee Input and Decision
		activities.	
Policy #10 To ensure region-wide consistency, King County would provide training to agency representatives. The training material would include a checklist of guidelines for best practices and the adopted Regional I/I Control Standards, Guidelines & Policies. The agency representatives would have the responsibility of enforcing the Regional I/I Control Standards and Guidelines.	• An inspection training course was conducted early on in the pilot projects that was very helpful in forging common understandings and assuring shared technical knowledge among all involved in the projects. • The term "Guidelines" has been replaced with "Procedures."	Proposed Policy #5 To ensure region-wide consistency, King County shall provide I/I Standards, Procedures and inspection training opportunities to agency representatives. The training material will include a checklist of guidelines for best practices and the adopted Regional I/I Control Standards, Procedures & Policies. The agency representatives shall then have the responsibility of enforcing the Regional I/I Control Standards, Procedures & Policies.	Change "To ensure region-wide consistency, King County shall…" to "To promote region-wide consistency, King County in conjunction with the Local Agencies shall provide training opportunities on the I/I Control Program to agency representatives." Drop last sentence.
Policy #11 Inspections, investigation or testing would include both the storm water/sanitary sewer drainage system on privately owned property and the connection with the public system. Based upon the programmatic approach selected by King County &/or the Local Agency, the inspection, investigation &/or testing activity could result in the Local Agency taking immediate action or selecting other methods for	• In the pilot projects, access to private property for both private property facility rehabilitation and for work on public sewers located on private property that needed construction easements was important. • Such access is paralleled by power companies, gas companies, and other utility services that need access to private property to provide a particular service.	Combine into New Policy #4 (see above)	

Original Working Draft Policies (October 21, 2002)	◊ Pilot Project Lessons Learned Related to Policies that Support the Standards and Procedures ◊ Editing and Policy Combinations	Revised Draft Policies Proposed to the E & P Subcommittee	E & P Subcommittee Input and Decision
controlling I/I.	• The access was necessary for investigating and addressing storm water facilities that were located on private property.		
<u>Policy #12</u> If public funds were supporting any portion of the I/I control work on privately owned property, then the responsible jurisdiction (Local Agency, including King County acting as a Local Agency, District or Associated Agency) would establish a process to manage and limit their liability. The potential site and in-ground liability issues should be a part of the I/I planning and design process, including an up-front agreement on when the jurisdiction's liability will end.	• There were several examples in the pilot projects where liability concerns led to changes in plans. For example, in one case water removed from a sanitary sewer might have caused slope instability problems, so the excess water was not removed. • Another example included avoiding work where a deck, slab, sidewalk, or driveway would be disturbed. • The start time of liability seemed to be most appropriate when the contractor started work on the specific private property. • Assurance is needed that completed facilities will continue to function as intended for a reasonable period of time.	<u>Proposed Policy #6</u> If public resources support any portion of the I/I reduction work on privately owned property, then the Lead Agency shall establish a process to manage and limit its liability. The potential site and in-ground liability issues shall be a part of the I/I planning and design process, including an up-front agreement on when the jurisdiction's liability will begin and end. If King County is the Lead Agency, a liability beginning and ending point will be established with the Local Agency and the private property owner.	Accepted.
Combine old Policies 17 and 21	• The pilots indicated that it is important that the contract include contractor requirements	Recommend combining Policies 17 and 21 into one policy <u>Proposed Policy # 7</u>	1st sentence: Change "…for any I/I reduction project…" to "…for publicly funded I/I reduction

Original Working Draft Policies (October 21, 2002)	◊ Pilot Project Lessons Learned Related to Policies that Support the Standards and Procedures ◊ Editing and Policy Combinations	Revised Draft Policies Proposed to the E & P Subcommittee	E & P Subcommittee Input and Decision
	to ensure long-term reliability of rehabilitated facilities.	The Lead Agency shall be responsible for ensuring that, for any I/I reduction project, the construction contract includes appropriate bonding, licensing, insurance, and warranty provisions to ensure satisfactory completion of the project and warranty of the project for a sufficient amount of time (recommended minimum 12 months). For private property installation or rehabilitation, the Local Agency shall be responsible for ensuring the private property owner will have a sufficient warranty.	projects…" Delete last sentence.
<u>Policy #13</u> If the consequence of I/I control work on a privately-owned property or public system results in the diversion of storm water drainage, and there exists a public storm water management system, then the I/I work would involve meeting the provisions of the controlling jurisdiction's current "storm water drainage" ordinance. Jurisdictional approval must be obtained; infeasible &/or prohibitively expensive modifications would be	• Examples of a variance/waiver of this policy did occur in the Lake Forest Park and Ronald pilot projects and related to driveway drains and sump pumps.	<u>Proposed Policy #8</u> Where I/I work on private or public property results in the diversion of storm water drainage, and there exists a storm water system, then the I/I work shall involve meeting the provisions of the controlling jurisdiction's current "storm water drainage" ordinances. Jurisdictional approval must be obtained; infeasible &/or prohibitively expensive modifications should be considered for variances/waivers.	*End after* "Jurisdictional approval must be obtained" *and create new policy to deal with "…infeasible and/or prohibitively expensive…"*

Original Working Draft Policies (October 21, 2002)	◊ Pilot Project Lessons Learned Related to Policies that Support the Standards and Procedures ◊ Editing and Policy Combinations	Revised Draft Policies Proposed to the E & P Subcommittee	E & P Subcommittee Input and Decision
considered for variances/waivers.			
<u>Policy #14</u> If the consequence of I/I control work on private residential property results in the diversion of storm water drainage (e.g., removal of illicit connections), and a public storm water management system does not exist, then the private property owner bears the responsibility for discharging the storm water drainage to an appropriate location. Modifications that are deemed to be infeasible &/or prohibitively expensive (for the property owner) would be considered for variances/waivers.	• Homeowner responsibility for handling storm drainage was used on the pilots and found to be acceptable.	<u>Proposed Policy #9</u> Where I/I work on private property results in the diversion of storm water and an adequate storm water system does not exist, then the private property owner bears responsibility for discharging the storm water drainage to an appropriate location. Where I/I work on public property results in the diversion of storm water and an adequate storm water system does not exist, the Local Agency or Associated Agency bears the responsibility for discharging the storm water drainage to an appropriate location. Modifications that are deemed to be infeasible &/or prohibitively expensive should be considered for variances/waivers.	*End after* "Jurisdictional approval must be obtained" *and create new policy to deal with "…infeasible and/or prohibitively expensive…"*
<u>Policy #15</u> Local Agencies would be responsible for obtaining legal access to private property; this can be through several different legal	• Access to private property was needed for the pilot projects for both private property facility rehabilitation and for work on public sewers on private	Combine into Proposed Policy #4 (see above)	

Original Working Draft Policies (October 21, 2002)	◊ Pilot Project Lessons Learned Related to Policies that Support the Standards and Procedures ◊ Editing and Policy Combinations	Revised Draft Policies Proposed to the E & P Subcommittee	E & P Subcommittee Input and Decision
instruments, including legally adopted procedures or through easements and specific agreements with homeowners.	property that needed construction easements. • Such access needs related to sewerage service are similar to power companies, gas companies, and other utility services that need access to private property to provide that particular service.		
<u>Policy #16</u> The Local Agency, Associate Agency or the Agency acting as the project manager would establish a "restoration to prior condition" standard for private property before initiating any I/I work (including landscaping, sidewalks, driveways, and rights-of-way).	• From the pilot projects it was learned that there can be problems in restoring certain types of plants/vegetation. • The pilots were careful and selective in where they disturbed private property so that "valuable" or "important" vegetation would be avoided. • One thought was that any disturbed vegetation would be replaced with a specific size or gallon of a same or similar plant. • An additional thought was that since the private property owner was getting a free side sewer replacement, they would have to restore the site and the project would only restore the original grade.	<u>Proposed Policy #10 (if confirmed by legal counsel)</u> The Lead Agency shall establish a standard for property restoration before initiating any I/I work (including landscaping, sidewalks, driveways, and rights-of-way). Options include: 1 – "restoration to pre-construction condition" 2 – "restoration as near as possible to pre-construction condition" 3 – "restoration to original grade only"	• Drop "and rights-of-way" and add sentence: "Public property restoration is governed by Local Agency or Associated Agency codes or ordinances." • Change to "options can include" • Drop #1, #3 • Change last option to "Basing value on restoration to as near as possible to pre-construction condition, consider up front property owner payment with signed waiver."

Original Working Draft Policies (October 21, 2002)	◊ Pilot Project Lessons Learned Related to Policies that Support the Standards and Procedures ◊ Editing and Policy Combinations	Revised Draft Policies Proposed to the E & P Subcommittee	E & P Subcommittee Input and Decision
	• The pilot project experience included restoration to pre-construction condition, restoration to as near as possible to pre-construction condition.		
Policy #17 Local Agencies should be responsible for obtaining legal mechanisms to ensure that privately funded installation or rehabilitation of side sewers will result in facilities that continue to function correctly for a reasonable period of time.	• An important component of reducing liability is for a Lead Agency to require appropriate contractor bonding, licensing, insurance, and warranties.	Combine into Proposed Policy #7 (see above)	
Policy #18 Pre-qualification. The public agency should establish a procedure whereby contractors are "pre-qualified" before bidding for work utilizing specialized technologies for sewer systems.	• Pre-qualifying contractors has various liability and resource concerns. • Pilot project experience did show problems, however, if the contractor did not have certain minimum experience.	Combine into Proposed Policy #11 (see below)	
Policy #19 Local Agency Minimum Qualifications. Local Agencies should establish specific requirements for contractors that address experience, staff qualifications, references and	• Duplicative with Policy # 18	Combine into Proposed Policy #11 (see below)	

Original Working Draft Policies (October 21, 2002)	◊ Pilot Project Lessons Learned Related to Policies that Support the Standards and Procedures ◊ Editing and Policy Combinations	Revised Draft Policies Proposed to the E & P Subcommittee	E & P Subcommittee Input and Decision
bonding with an emphasis more on safety and restoration than on sewer system construction. An approved contractor with applicable insurance, bonds and licenses to work in the Associated Agency's right-of-way may be required.			
Combine old Policies 18 and 19	• Minimum contractor experience was important on successful pilot projects.	Recommend combining Policies 18 and 19 into one policy <u>Proposed Policy #11</u> The Lead Agency shall develop in the bid specifications specific minimum experience requirements for contractors to ensure that the contractor hired will have experience in the type of work they are to perform.	Accepted.
<u>Policy #20</u> The Agency managing an I/I control project must obtain all applicable permits from the municipal jurisdiction. The project's costs would cover all costs per the jurisdiction's codes and permit conditions and, therefore, would be borne by the Agency funding the I/I control project.	• Pilot project experience showed that specific permits such as SEPA, HPA, 404, or other total project environmental permits should be obtained by the Lead Agency while permits such as building, utility, ROW are usually best to be obtained by the contractor.	<u>Proposed Policy #12</u> The Lead Agency should obtain most applicable permits, including the SEPA, HPA, 404, or other State or Federally required permits. The contractor should obtain permits as detailed in the specifications such as the building, road or utility, ROW use, &/or clearing and grading permits. The permits required to be obtained by the contractor should be	• Change beginning to: "Local Agency should obtain all permits feasible, including…" • Drop last two sentences.

Original Working Draft Policies (October 21, 2002)	◊ Pilot Project Lessons Learned Related to Policies that Support the Standards and Procedures ◊ Editing and Policy Combinations	Revised Draft Policies Proposed to the E & P Subcommittee	E & P Subcommittee Input and Decision
		specifically listed in the bidding documents. The permit costs should be eligible for Regional I/I Control Program funding. Exceptions to this approach shall be specified in a particular IGA.	
	• The pilot projects showed that cooperative efforts between the Local Agency, the Associated Agency, and the County work best in obtaining permits.	Proposed Policy #13 For all permit needs, the jurisdictions including King County, the Local Agency, and the Associated Agency (if pertinent) will work cooperatively and collaboratively.	Accepted.
Policy #21 Local Agencies should be responsible for obtaining the legal mechanisms to ensure that publicly funded installation or rehabilitation of public sewers will result in facilities that continue to function correctly for a reasonable period of time.	• There is no need in the Policies to separate policies into private or public categories, therefore this can be combined into one policy with private property.	Combine into Proposed Policy #7 (see above)	
Policy #22 MWPAAC Sub-committee Review. An "I/I Control Program" Subcommittee(s) would be formed. Representation, process and documentation protocols would be established. The Subcommittee(s) would	• Development of the Regional I/I Control Program has included active involvement of a MWPAAC Subcommittee in providing direction and input for the Program. • Such involvement should continue during Program	Combine into Proposed Policy #14 (see below)	

Original Working Draft Policies (October 21, 2002)	◊ Pilot Project Lessons Learned Related to Policies that Support the Standards and Procedures ◊ Editing and Policy Combinations	Revised Draft Policies Proposed to the E & P Subcommittee	E & P Subcommittee Input and Decision
consider proposal(s) and report to the full MWPAAC describing the revision to Standards, Guidelines &/or Policies as: (a) significant; (b) no effect on the consistency or effectiveness of the Program; &/or (c) an enhancement to the Program. The Subcommittee(s) would recommend whether or not a revision should be adopted as part of the Regional I/I Control Program.	implementation. • The term "Guidelines" has been replaced by "Procedures."		
<u>Policy #23</u> MWPAAC members would consider the recommendations of the "I/I Control Program" Subcommittee then, per the method established in the By-Laws, the Committee would recommend to King County the adoption of specific changes to the Regional I/I Control Program's Standards, Guidelines and Policies.	• MWPAAC was informed of Regional I/I Control Program components and active in decision-making. • This approach should continue with Program implementation. • The term "Guidelines" has been replaced by "Procedures."	Combine into Proposed Policy #14 (see below)	
		<u>Proposed Policy #14</u> MWPAAC shall review and make recommendations on proposed revisions to the Regional I/I	Accepted.

Original Working Draft Policies (October 21, 2002)	◊ Pilot Project Lessons Learned Related to Policies that Support the Standards and Procedures ◊ Editing and Policy Combinations	Revised Draft Policies Proposed to the E & P Subcommittee	E & P Subcommittee Input and Decision
		Control Program Standards, Procedures, & Policies. MWPAAC shall recommend whether or not a revision should be adopted as part of the Regional I/I Control Program.	

APPENDIX C

This appendix is available electronically upon request.

The Guide Specification (Draft, June 2004),
for the King County Regional Inflow and Infiltration Control Program
is available to download at:

http://dnr.metrokc.gov/wtd/i-i/library/guidespecs/index.htm

Appendix D

COPY

King County
Department of
Natural Resources and Parks
Wastewater Treatment Division
Regional I/I Control Program

Construction Update

Mercer Island Sewer Repair Pilot Project

Construction activities begin the week of August 11, 2003

This month Gelco Services, Inc., begins cleaning and lining the sewer mains in a portion of the East Seattle neighborhood as part of a joint City of Mercer Island and King County Wastewater Treatment Division's Regional Infiltration/Inflow Control Program. During the summer of 2002 crews conducted a sewer system evaluation study that included smoke testing and closed circuit television (CCTV) inspections to determine the health of the sewer system in the neighborhood. This work showed defects such as cracks, offset joints and tree root intrusion.

Infiltration/Inflow (I/I) is clean storm and/or groundwater that enters the sewer system through cracked pipes, leaky manholes, or improperly connected storm drains, down spouts and sump pumps. Most inflow comes from stormwater and most infiltration comes from groundwater.

More than 16,000 linear feet of mains will be rehabilitated using a technology known as **cured-in-place lining**. The pipe is repaired by first pulling a fiberglass and resin liner into the pipe. The liner is then inflated with steam, which expands the liner and forces it to conform to the pipe being repaired. The liner then cures in several hours, leaving a smooth, jointless, one-piece, leak-free pipe. There is no excavation required for installation of the sewer main liners. The normal sequence of work is as follows:

- Step 1: Pipeline is cleaned and videotaped;
- Step 2: Liner is installed in the sewer main;
- Step 3: Holes are cut in the liner to reopen the service connections.

Step 1 of this process is usually completed a few days before any lining work is done. Then, steps 2 and 3 are performed, usually in one twelve hour period.

(Continued on back)

Please Note:
During the lining process, homes can be disconnected from the sewer for up to 8 hours. Crews will notify residents 48-hours before construction by placing a notice, usually a door-hanger at the front door. Residents are asked to reschedule uses of water such as showers, washing machines and dishwashers for the day and to not flush toilets during the sewer service disruption. Water flowing into the pipe adversely affects the curing process.

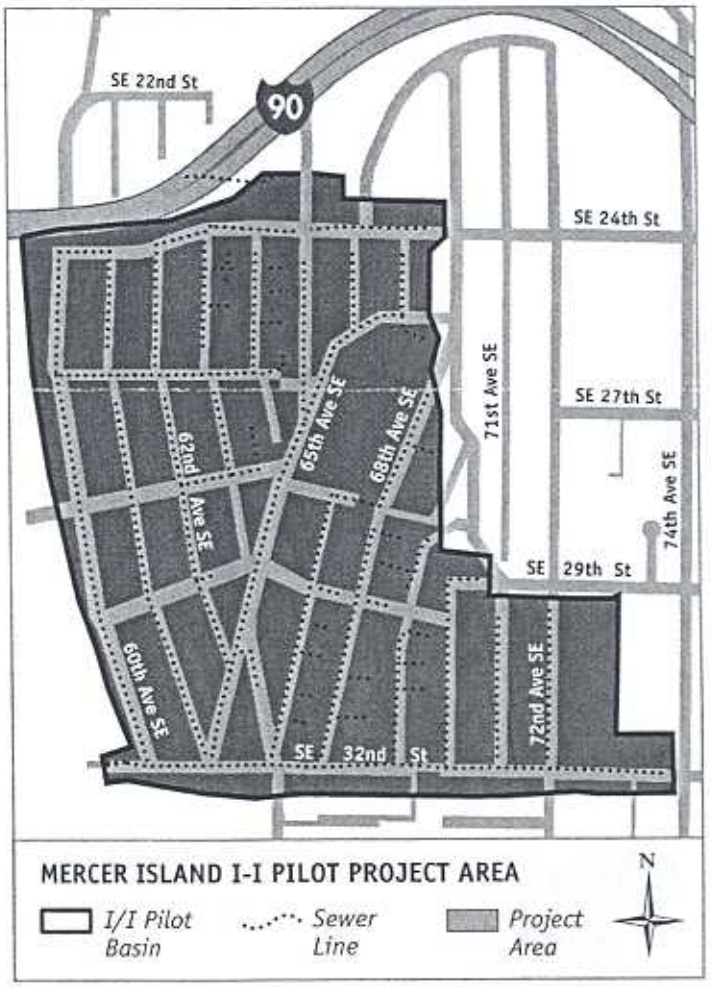

Although this trenchless method means we are not tearing up the street to fix the mains there are still several impacts to the neighborhood. Traffic flaggers and signs will help direct drivers safely around the trucks and equipment. Residents will experience sewer service interruptions while crews install the pipe lining.

Pilot Project Schedule

July 2003: Construction contract awarded to Gelco Services, Inc.

August–October 2003: Sewer main cleaning, lining

November 1, 2003: Construction work and restoration substantially completed

For More Information:

I/I Program Web Site: http://dnr.metrokc.gov/wtd/i-i

Mercer Island Pilot Project Web Site: http://dnr.metrokc.gov/wtd/i-i/Pilots/MIPilot/index.htm

If you have any questions or concerns about this pilot project, please contact:

After Hours/King County Pager: 206-540-7437

Mary Lundt, Project Manager
King County Wastewater Treatment Division
206-263-3184
E-mail: mary.lundt@metrokc.gov

Patrick Yamashita, City Engineer
City of Mercer Island
206-236-3620
E-mail: patrick.yamashita@ci.mercer-island.wa.us

King County
Department of Natural Resources and Parks
Wastewater Treatment Division
201 South Jackson Street, Suite 512
Seattle, WA 98104-3855

Alternative formats available
206-263-6029 (voice) or 711 (TTY)

COPY

City of Kent/King County Infiltration/Inflow Removal Pilot Project

KENT WASHINGTON

Background

King County is responsible for transporting and treating wastewater collected by 32 local agencies in the Seattle metropolitan area. These agencies are working together to define ways to remove clean water, called infiltration (groundwater) and inflow (stormwater) or I/I, from the wastewater system.

A major part of the Regional I/I Control Program is planning, designing, constructing, and then monitoring the effectiveness of a limited number of pilot projects to remove I/I. It is anticipated that these pilot projects will test different techniques for I/I removal that are applicable for the entire region. Through a regional consensus process, local agencies selected ten final pilot projects from a broad list of candidates. A project proposed by the City of Kent was selected as one of the ten projects. Flow measurements for the project area indicated a significant amount of I/I. This pilot project will be funded through the King County I/I Control Program.

Kent Pilot Project Description

The Kent pilot project will rehabilitate side sewers on private property from the connection at the house down to the main sewer pipe in the street. Sewer system investigations conducted last fall, which included a combination of smoke testing and closed circuit television (CCTV) inspections showed defects in the side sewers such as cracks, offset joints and tree root intrusion. The purpose of the Kent pilot project is to determine the cost effectiveness and technical effectiveness of removing I/I by repairing private side sewers in the basin.

The repair method to be used in the Kent pilot project is a technology known as cured-in-place lining. We plan to use a specific type of lining known as "T-Liner".

The majority of the 168 side sewers in the pilot project area will receive this lining, in effect giving the homeowner a new side sewer. Small excavations will be required for the installation of cleanouts to facilitate installation of the liner. The contractor will restore areas disturbed by excavation after installing the cleanouts and completing the lining process.

This trenchless technology is much less invasive to the property than typical full trench excavation methods and provides a quality repair solution. The liner material is a felt tube specifically manufactured for the length

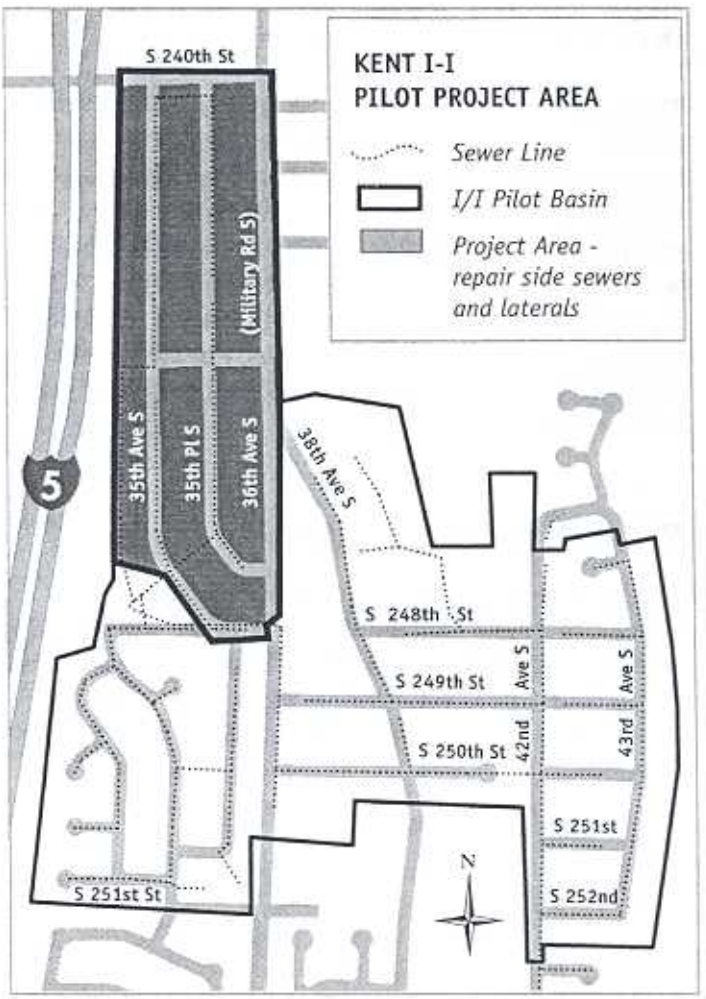

Before:
The picture shows tree root intrusion causing a blockage and allowing groundwater to enter.

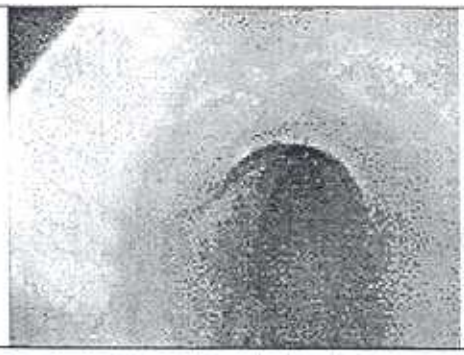

After:
The liner cures in approximately 2 hours, leaving a smooth, jointless, one-piece, leak-free seal.

and diameter of the pipes being repaired. The tube is vacuum impregnated with a polyester or vinyl ester resin and placed inside a protective installation device that is inserted into the existing sewer through the cleanout installed near the home where the side sewer connects with the building. The lining is installed by an inversion technique using air or water pressure. The lining and resin cure in about 2 hours, leaving a smooth, jointless, one-piece, leak-free seal.

During construction homes would be disconnected from the sewer for up to 8 hours. We would notify residents when the work will occur so they can make arrangements and reschedule uses of water such as showers, washing machines and dishwashers.

The County will monitor flows in the basin after construction (winter 2003/2004) to determine the amount of I/I removed as a result of the side sewer rehabilitation work. The shaded area in the map on the previous page depicts the approximate area in which work will be conducted (area along 35th Ave. S., 35th Pl. S., 36th Pl. S. and Military Rd S.). However, depending on availability of funds and whether the side sewers meet project criteria, not all homes in the shaded area will be included in the project.

Pilot Project Schedule

Designs and specifications for this project are to be completed in mid March 2003. The project will be bid in late-April/early-May 2003. King County will award the contract and work will begin in early June 2003. All construction and restoration work will be complete by fall 2003.

For More Information

King County and the City of Kent will provide more detailed information before construction begins, and will work closely with property owners and residents of the pilot project area to minimize the impacts of construction.

You can get more information about the King County Regional I/I Control Program by visiting the King County website (http://dnr.metrokc.gov/wtd/i-i). If you have any questions or concerns, please contact:

Erica Herrin, Project Manager
King County Wastewater Treatment Division
206-684-1138 E-mail: erica.herrin@metrokc.gov

Dave Brock or **John Hawkins**
City of Kent, Public Works Operations
253-856-5600 E-mail: dbrock@ci.kent.wa.us

Available in alternative formats
206-684-1138 or TTY Relay:711

King County
Department of Natural Resources and Parks
Wastewater Treatment Division
King Street Center
201 South Jackson Street, Suite 512
Seattle, WA 98104-3855

Produced by:
WLRD Visual Communications & Web Unit, LPRF

File:
0301 WTD Kentflyer.p65

Attachment A

Standards, Procedures and Policies for I/I Reduction Projects

Final Issues and Findings

Regional I/I Control Program

Standards, Procedures & Policies for I/I Reduction Projects
Final Issues and Findings

Background

Local Agency Workshop #10 was held Tuesday, October 11, 2005 to present, answer questions about, gather input on, and reach consensus on including draft standards, guidelines, procedures, and policies as draft in the Executive's Program Recommendation for I/I control. The workshop emphasized that the proposed direction for long-term I/I Control was based on Local Agency input, the key points including:

- Local Agencies to regulate new development and redevelopment;
- Standards, guidelines, procedures, and policies are to remain "draft" until they could be reviewed, revised, and finalized by the County and MWPAAC after initial reduction projects were completed;
- Draft standards, guidelines, procedures, and policies (once finalized) to be incorporated into County Code and Local Agency regulations as necessary;
- County to conduct a system flow review every ten years in partnership with Local Agencies; and
- County to maintain current information related to I/I reduction technology, and act as a clearinghouse.

The draft standards, guidelines, and procedures are intended for use in the planning, design, and construction of projects that reduce I/I. The policies are designed to support the draft standards, guidelines, and procedures. The history of developing the draft standards, guidelines, procedures and policies included:

- Individual meetings with each Local Agency
- Revisions and presentation to the Local Agencies at Workshop #7
- E&P Subcommittee detailed review and formulation through 15 meetings
- Use of draft standards, guidelines, policies, and procedures on pilot projects
- E&P Subcommittee review and revision of draft standards, guidelines, policies and procedures following completion of the pilot projects, summer of 2004 (MWPAAC Engineering & Planning Subcommittee Final Draft Regional I/I Control Standards, Procedures, Policies and Intergovernmental Agreement (E&P Final Draft))

Of the 41 draft standards and guidelines, 27 have been accepted by the E&P Subcommittee as draft standards to be used on all projects in the I/I Control Program, while the remaining 14 had been accepted as draft guidelines. The draft standards and guidelines are grouped under the headings Planning, Public, and Private. Guide specifications have also been developed and many of the standards referred to the guide specifications.

Local Agencies had a central role in development of the standards, guidelines, policies and procedures. Other sources included the Department of Ecology (WSDOE), a review/evaluation of rehabilitation methods, a national survey of other agencies, Washington State Department of

Transportation (WSDOT)/American Public Works Association (APWA) and other standard specifications, and validation/revision of draft standards based on pilot project experience.

The name and a brief description of each draft standard and guideline, whether it has been accepted as a draft standard or a draft guideline and a qualitative estimate of how many Local Agencies already have similar I/I standards in their codes is provided in the following table.

Standard/Guideline Title	General Description * Presenter comments	Standard or Guideline	Number of Local Agencies that Have Similar I/I Standards
PS[1]-1: Storm Drainage Connections to the Sanitary Sewer	Prohibits storm drainage connections to the sanitary sewer system unless approved by the County and the local agency. * Exemptions for small areas of surface drainage, such as areas around dumpsters, are often allowed where they can flow into sanitary sewers.	Standard	Some
PS-2: Design Capacity for Pipeline Rehabilitation Projects	Requires the pipeline system designer to consider any loss in hydraulic capacity on pipeline	Standard	Few
PS-3: Visual Inspection of Manholes for Sewer System Evaluation Survey (SSES) Investigations	Outlines provisions for performing visual inspection of manholes for SSES investigations.	Guideline	None
PS-4: Closed Circuit Television (CCTV) Inspection of Sewers for SSES Investigation	Outlines provisions for performing CCTV inspection of sewers for SSES investigations.	Guideline	Few
PS-5: Smoke Testing for SSES Investigations	Outlines provisions for performing smoke testing for SSES investigations. * Documentation of problems with photographs or sketches. When private property owners must fix problems themselves, documentation and indisputable proof of the problems is important.	Guideline	None
PS-6: Dye Testing for SSES Investigations	Outlines provisions for performing dye testing for SSES investigations. * Recommended that appropriate agencies be informed to avoid erroneous toxic spill calls.	Guideline	None

[1] Planning Standard

Standard/Guideline Title	General Description * Presenter comments	Standard or Guideline	Number of Local Agencies that Have Similar I/I Standards
PS-7: Modeling and Engineering Analysis	Recommends basin modeling be performed to assess ongoing and future sewer planning efforts	Guideline	Few
PUB[2]-1: Connections to Existing System	Requires connections of new sewer piping to an existing sewer system at a manhole or to a sewer main via a tee. Also requires testing and inspection of the new piping before it is put into service. * Emphasis is to avoid hammer taps that are problematic for I/I into the system.	Standard	Few
PUB-2: Sewers on Steep Slopes	Requires sewer mains on steep slopes to be designed by a Professional Engineer (PE) to ensure integrity of the system. * Joints can pull apart during ground movement or there can be other problems with the pipe itself.	Standard	Few
PUB-3: Manhole Location and Covers	Standard focuses on avoiding placement of manholes in locations subject to inflow sources. In those areas where it cannot be avoided, the standard requires the manhole to be watertight.	Standard	Few
PUB-4: Manhole Size	WSDOT/APWA guidelines and manhole manufacturers' recommendations to be followed regarding the minimum distance between knockouts in manholes * Undersized manholes that are too small for connections, may experience cracking.	Standard	Few
PUB-5: Manhole Joints	Manhole to be watertight from the casting down. Materials and construction to be in accordance with WSDOT/APWA guidelines.	Standard	Few
PUB-6: Side Sewer Connection Location and Taps	Outlines requirements for connection of side sewers to sewer mains. * Emphasize avoiding hammer taps.	Standard	Few
PUB-7: Sewer System Design	Requires sewer system design to be performed by a PE applying appropriate standards and measures regarding pipe materials, bedding, and backfill.	Standard	Few
PUB-8: Abandonment Requirements	Addresses abandonment requirements for manholes and sewer pipes.	Standard	Few

[2] Public Standard

Standard/Guideline Title	General Description * Presenter comments	Standard or Guideline	Number of Local Agencies that Have Similar I/I Standards
PUB-9: Pipe Rehabilitation Methods	Addresses design and construction requirements for pipe bursting, cure-in-place pipe, slip lining, fold and form pipe, and spray-on linings. * Most agencies don't deal with rehabilitation in their standards, even though many of them are using these rehabilitation techniques.	Guideline	None
PUB-10: Manhole Rehabilitation	Includes design and construction requirements for manhole rehabilitation, including coatings, linings and chemical grouting.	Guideline	Few
PUB-11: Spot Repairs	Outlines requirements for trenchless and dig-and-replace spot repairs on sewer mains * Guideline refers back to the guide specifications with the different methods of pipe bursting and lining.	Guideline	None
PUB-12: Manhole Leveling Rings	Outlines requirements for manhole materials and installation of leveling rings.	Standard	Few
PUB-13: Manhole Lids/Inserts	Requires a manhole pan or gasketed, locking lid for manholes that are susceptible to inflow.	Standard	Few
PUB-14: Root Intrusion	Addresses root removal and correction of I/I problems at the point of root intrusion. * Root intrusions should be evaluated for removal during the wet season when soils are fully saturated.	Standard	None
PUB-15: Pipeline Leak Testing	Requires that new sewers pass an air or water test. There is also a provision that if the testing cannot be performed, the sewer needs to be CCTV-inspected for leakage during the wet season, but while still under warranty.	Standard	Few
PUB-16: Manhole Leak Inspection	Requires visual inspection of manholes following substantial completion to verify the structure and connections are watertight.	Standard	Few
PUB-17: CCTV Inspection	Requires a complete CCTV inspection of newly installed and rehabilitated sewer pipe.	Standard	Some
PUB-18: Inspection of Pipe Installation and Backfill	Outlines inspection activities for pipe installation and backfilling operations.	Standard	Some
PUB-19: Product Specific Inspection	Requires verification that specified products and materials are being delivered to the job site, and that specified test reports are being provided. * Verification that right type of pipe is going into the ground.	Standard	None

Standard/Guideline Title	General Description * Presenter comments	Standard or Guideline	Number of Local Agencies that Have Similar I/I Standards
PUB-20: Certification, Warranty and Qualifications	Requires a minimum 1-year warranty. For rehabilitation products or systems without a proven track record, the product manufacturer must provide certification that the product will perform as specified.	Guideline	Few
PRV[3]-1: Pipe Protection – Depth of Cover	Addresses depth of cover for side sewers, and strives to limit burial depths between 3 feet minimum and 15 feet maximum. The guideline requires following pipe manufacturers' recommendations for materials and installation when these conditions cannot be met. * Address private property standards separately because they often show up in different places than public standards.	Guideline	Few
PRV-2: Allowable Connections to Side Sewers	Prohibits new side sewers discharging to separated sewer systems to convey sources of clean water flow.	Standard	Few
PRV-3: Pipe Zone Bedding and Trench Backfill	Outlines requirements for side sewer pipe installation and bedding requirements. * We made this into a guideline because agencies approach this differently.	Guideline	Some
PRV-4: Pipe Materials	Addresses required design characteristics of pipe materials to be used for side sewers	Guideline	Some
PRV-5: Inspection Wyes/Cleanouts	Requires installation of inspection wyes/cleanouts between 2 and 5 feet from the face of the building for new sewer installations. * This allows you to get in and inspect side sewers	Standard	Some
PRV-6: Lateral and Side Sewer Rehabilitation Methods	Addresses design and construction requirements for pipe bursting, cured-in-place pipe, slip lining, and fold-and-form pipe for rehabilitation of side sewers.	Guideline	None
PRV-7: Spot Repairs	Outlines requirements for trenchless and dig-and-replace spot repairs on side sewers.	Standard	None
PRV-8: Root Intrusion	Addresses root removal and correction of I/I problems at the point of root intrusion.	Standard	None
PRV-9: Side Sewer/Lateral Leak Testing	Requires that new sewers pass an air or water test.	Standard	Some

[3] Private Standard

Standard/Guideline Title	General Description * Presenter comments	Standard or Guideline	Number of Local Agencies that Have Similar I/I Standards
PRV-10: Sanitary Side Sewer Inspection	Requires that side sewers be inspected before the trench is backfilled. * Some agencies already doing this. Concerns over the FTE if every single backfill needed to be inspected.	Guideline	Few
PRV-11: Sanitary Side Sewer CCTV Requirements	Requires a CCTV inspection of the connection between the lateral and the main where the lateral/side sewer cannot be pressure tested.	Standard	Some
PRV-12: Product Specific Inspection	Requires verification that specified products and materials are being delivered to the job site, and that specified test reports are being provided.	Standard	None
PRV-13: Product Specific Certification	For rehabilitation products or systems without a proven track record, requires that the product manufacturer provide certification that the product will perform as specified.	Standard	Few
PRV-14: Bonding and Warranty Inspection	In order to assure that I/I improvements remain intact and maintained, requires inspection of improvements prior to the end of the warranty period so that construction deficiencies can be corrected and paid for via the performance bond.	Standard	Few

Final Issues and Findings to the Draft Standards, Guidelines, and Procedures

At Workshop #10, each of the standards, guidelines, policies and procedures were reviewed and discussed. Comments and suggestions for language revisions, additions and deletions were received and recorded. The Final Draft has not been updated to reflect these changes, as there will be further sessions to revise and finalize the document following completion of initial I/I reduction projects. The comments, issues and findings listed on the following pages document the feedback received at the workshop and will be brought forward and discussed in the review sessions to finalize the standards, guidelines, policies and procedures after initial I/I reduction projects are complete.

General Comments

- Finalizing the draft standards, guidelines, and procedures now and putting them into code may be premature. We want to revisit the draft standards, guidelines, and procedures after we have more field experience on large-scale projects.

- There is a need to test these draft standards, guidelines, and procedures and see how they affect the Local Agencies. Keeping them draft doesn't hinder the ability to test them, but it does mean that another two to three years may go by without getting some Local Agencies to establish certain standards.

- In trying to be cost-effective, the Executive's Program Recommendation will provide that the cost-effective projects (including those on private property and Local Agency

conveyance systems) will be funded from regional wastewater revenues. The funding will come from money that is saved by minimizing capital improvements.

- Enforcement procedures for the standards, guidelines and procedures have not been developed or discussed at this point in time. After the initial projects, if the standards, guidelines and procedures are adopted, a collaborative process to establish enforcement procedures will be initiated.

- There should be an additional policy that spells out when a Local Agency will be responsible for funding general side sewer repair. Unless there is absolute proof, smoke-testing or some other court-verified proof, that a property owner is causing a problem, the owner may not cooperate.

Specific Issues and Findings – Draft Standards/Guidelines/Procedures

- Per PUB-2, the County is to verify that a Professional Engineer does the design of County owned pipes to be installed on steep slopes.

- PUB-17 provides that all newly installed laterals shall be CCTV inspected. This applies only to the situation and condition where the lateral cannot be pressure tested.

Specifc Issues and Findings – Draft Standard Details

- Standard details were developed to augment the Local Agency standard details and were not meant to stand alone.

- The guide specifications have been sent to the Local Agencies, including lessons learned.

- The intent is to have a group look at industry standards and act as a clearinghouse for lessons learned. He stressed it was a part of the process that he didn't want to get lost during the discussions.

Specific Issues and Findings - Draft Policies

- The purpose of the draft policies is to support the draft standards, guidelines, and procedures; and to provide a framework upon which the County and the Local Agencies could craft specific policies. Prior to the pilot projects there had been 23 draft policies, which had since been condensed into 15 by the E&P Subcommittee. The draft policies have not been subject to legal review and do not represent final policy language.

- **Policy #1: Public Funding for I/I Reduction Projects -** The language of the Right of Entry agreement language was carefully crafted to address the issue of future liability after the completion of I/I rehabilitation on private property. There was a clause terminating liability on a specific date or at the end of the warranty period. When a defect is found that points to a lack of performance by a contractor, it would be addressed on a case-by-case basis by the risk-assessment staff of the agency involved.

- **Policy #2: Public Awareness of I/I: Educational Materials -** The policy will include how the information clearinghouse will be effective and how information will be disseminated, for example via the website, mailing lists, hotlines, etc. A multi-lingual approach similar to the alternative formats for the pilot projects is also needed,

- **Policy #3: Public Awareness of I/I: Responsibility for Community -** Unless otherwise specified or negotiated in the IGA, the Lead Agency for each specific I/I reduction project shall be responsible for community education/involvement.

- **Policy #4: Access to Private Property for I/I Reduction and Control -** The local agency shall pass the necessary ordinances/resolutions and develop the appropriate access agreements that allow each agency or its agents to gain access to private property, such as a right-of-entry or a construction and inspection easement.

- **Policy #5: Inspection Training -** To promote region-wide consistency, the County, in conjunction with the local agencies, shall provide training opportunities on an I/I control program to agency representatives.

- **Policy #6: Limiting Liability -** If public resources support any portion of the I/I reduction work on privately owned property, then the Lead Agency shall establish a process to manage and limit its liability. The potential site and in-ground liability issues shall be a part of the I/I planning and design process. This issue is typically between the contractor and the Lead Agency. Contractors hold the client blameless for work being done.

- **Policy #7: Bonding, Licensing, Insurance, and Warranty Provisions -** The Lead Agency shall be responsible for ensuring that, for publicly funded I/I reduction projects, the construction contract includes appropriate bonding, licensing, insurance, and warranty provisions to ensure satisfactory completion of the project and warranty of the project for a sufficient amount of time (recommended minimum 12 months).

- **Policy #8: Stormwater Drainage Ordinances -** Where I/I work on private or public property results in the diversion of stormwater drainage, and there exists a stormwater system, then the I/I work shall involve meeting the provisions of the controlling jurisdiction's current stormwater drainage ordinances. Jurisdictional approval must be obtained. The long-term the potential for cumulative impacts resulting from I/I rehabilitation and stormwater diversions needs to be anticipate as part of the I/I rehabilitation planning process. Local and regional agencies responsible for stormwater management need to be included in the early planning stages. For the nine cost-effective initial projects that have been identified, the County and local agencies should initiate this coordination process now.

- **Policy #9: Responsibility for Stormwater Drainage -** Where I/I work results in the diversion of stormwater and an adequate stormwater system does not exist, the private property owner (on private property) or the local agency or associated agency (on public property) bears responsibility for discharging the stormwater drainage to an appropriate location.

- **Policy #10: Infeasible and/or Prohibitively Expensive Modifications -** Where an I/I control project would result in the diversion of stormwater drainage, and the modifications required to properly discharge the stormwater are deemed to be infeasible and/or prohibitively expensive (for the property owner), consider giving the property owner choice of disconnection of illicit connection or surcharge. The term "prohibitively expensive" needed to be defined to establish a consistent method of evaluation. The surcharge could act as leverage in prompting the property owner, local agency or County to make necessary I/I repairs.

- Additional Options for modifying the policies related to I/I related diversions of stormwater

  - Modify draft Policy #1 to read, "environmentally infeasible and/or prohibitively expensive modifications should be considered for variances/waivers, <u>but if a property owner fails to make repairs that are feasible and not prohibitively expensive, a surcharge may be levied</u>." This would allow for the removal of draft Policy #10.
  - Modify draft Policy #1 to read, "environmentally infeasible and/or prohibitively expensive modifications should be considered for variances/waivers <u>that may include a surcharge</u>." This would allow for the removal of draft Policy #10.
  - Do not modify Policy #1 and re-word Policy #10 to include a variance/waiver.
  - Modify draft Policy #10 to read, "Local Agency <u>may</u> add a surcharge".
  - Modify draft Policy #10 to allow for a temporary service agreement that says if and when conditions change, the property owner would be required to disconnect.
  - Modify draft Policy #10 to allow the property owner the option of obtaining a waiver until the property is sold or placing a lien on the property. The surcharge in draft Policy #10 is not associated with a surcharge for the County system. It is intended as a way for Local Agencies to deal with their customers.

- **Policy #11: Property Restoration -** The Lead Agency shall establish a standard for property restoration before initiating any I/I work (including landscaping, sidewalks, and driveways). Public property restoration is governed by local agency or associated agency codes or ordinances.

- **Policy #12: Contractor Qualifications -** The Lead Agency shall develop in the bid specifications specific minimum experience requirements for contractors to ensure that the selected contractor has experience in the type of work to be performed

- **Policy #13: Required Permits -** The lead agency should obtain all feasible state or federally required permits. The contractor should obtain permits as detailed in the specifications, such as the building, road, utility, right-of-way use, and/or clearing and grading permits. The permits that the contractor is required to obtain should be listed in the bidding documents.

- **Policy #14: Cooperative Efforts -** For all permit needs, the jurisdictions including the County, the local agency, and the associated agency (if pertinent) will work cooperatively and collaboratively.

- **Policy #15: Revisions to Standards, Procedures, and Policies -** MWPAAC shall review and make recommendations on proposed revisions to regional I/I control program.

MWPAAC shall recommend whether or not a revision should be adopted as part of a regional I/I Control Program.