King County
Department of Natural Resources and Parks
Solid Waste Division

E-ZWorm Composting Bin

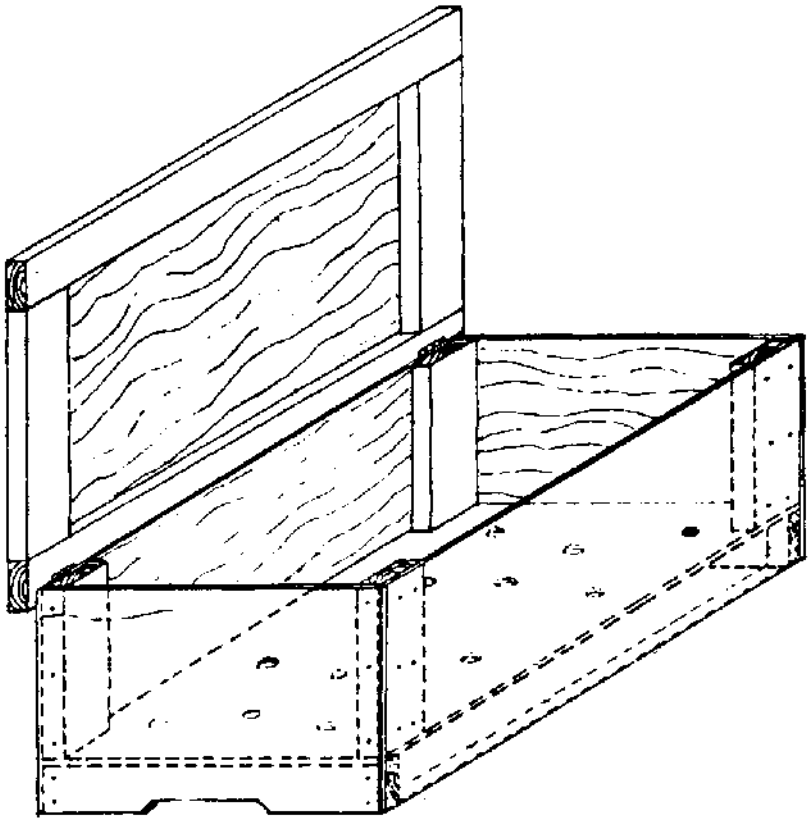

E-ZWorm Composting Bin

This bin is designed to compost fruit and vegetable food wastes using red worms. Red worms are first “bedded” in shredded and moistened newspaper, cardboard, or brown leaves (bedding should be "moist as a wrung out sponge”). Food wastes are then buried in the bedding, and the worms turn it all into a high-quality compost suitable for use with house plants, seedlings, or for general garden use. Every 6 to 8 months, compost can be moved to one side of the bin and new bedding added to the other side. If food wastes are buried in the new bedding only, most of the worms will migrate to the food wastes within two months. Finished compost can then be harvested, the newly emptied half of the bin can be rebedded, and the process can be repeated.

Costs to construct this worm bin will vary depending on current lumber costs. In March 1999, it cost approximately $40 to build this bin using new wood and hardware. Worm bins can also be made from recycled wooden boxes or other containers. Any worm bin must have a tight-fitting lid to keep pests out, and ventilation or drainage holes to provide adequate air circulation and control moisture levels. A starter batch of worms can be dug out of a friend’s worm bin or purchased at various locations in King County. it isd important to use redworms (scientific name: *Eisenia fetida*) as nightcrawlers (*Lumbricus terrestris*) do not eat food waste. Call 206-296-4466 for a list of local sources. For more information on worm composting, see Mary Appelhof’s book, ***Worms Eat My Garbage***.

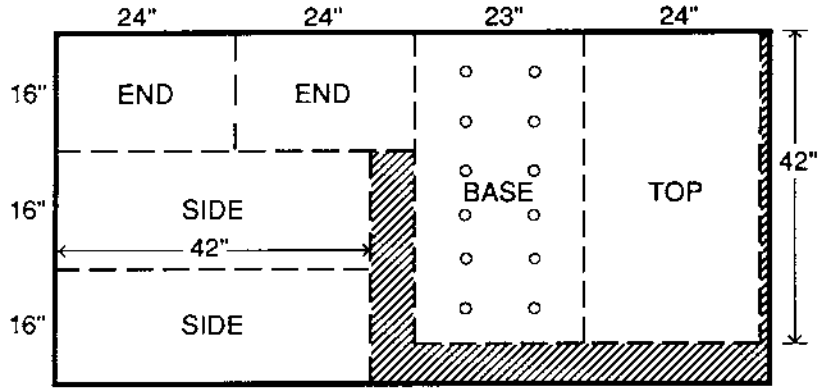

4' x 8' SHEET OF 1/2" PLYWOOD

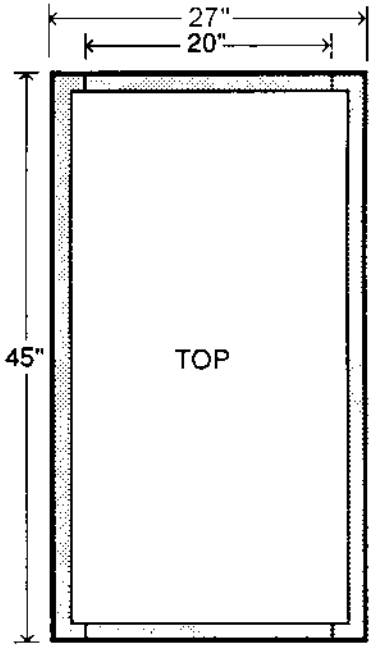

LID: 2x4 FRAME
WITH PLYWOOD COVER

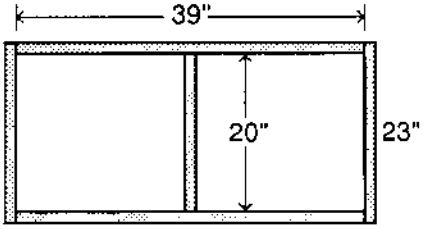

BASE FRAME: 2x4s ON EDGE

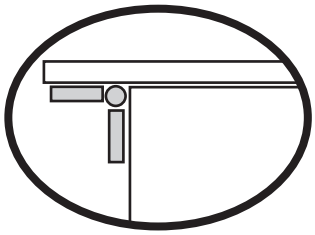

Hinge Position: Side
View, Close-up

Construction Details

Measure and cut plywood as indicated in the illustration. Cut the 12-foot 2x4 board into five pieces: two 39", two 23", and one 20" long. Nail the 2x4s together on edge with two 16d nails at each joint, as illustrated in the Base Frame diagram. Nail the plywood base piece onto the 2x4 frame.

Cut four 1-foot lengths out of the 16-foot 2x4. Nail a 1-foot 2x4 onto each end of the side panels flush with the top and side edges of the plywood. Nail the side pieces onto the base frames. To complete the box, nail the ends onto the base and sides. To reinforce the box, make sure there is a nail staggered at least every 3 inches wherever plywood and 2x4s meet. Drill twelve 1/2" drainage holes in the bottom of the box.

To build the lid, take the remaining 12-foot 2x4 and cut it into two 45" pieces and two 20" pieces. Lay these pieces in a rectangle with the shorter pieces to the inside (see diagram). The plywood top should be inset from the edges of the 2x4s by 11/2" all the way around. Nail the plywood onto the 2x4s securely.

To attach the lid to the base of the worm bin, center the lid on top of the constructed box. (The lid will overhang the box.) Hinge the lid to the base at both ends of the backside of the worm bin. Each hinge should be screwed to the 2x4 framing of the lid and the 2x4 framing of the box so that the lid will stand upright when opened. (The lid of this worm bin is quite heavy. For safety, prop the lid when it is necessary to open it during use of the worm bin.)

Materials:

1	4' x 8' sheet of 1/2" exterior plywood
1	14' utility 2x4 **and one** 16' 2x4
3/4	lb. 6d galvanized nails or 1 1/4 drywall screws
12	16d galvanized nails
2	3" galvanized door hinges with screws

Tools Required:

Tape measure, skill saw or rip hand saw, hammer, saw horses, long straightedge or chalk snap line, screwdriver, and drill with 1/2" bit.

Remember to use eye and ear protection.

Building tips: *(1) Use drywall screws and a drill with a screw bit to speed construction and strengthen bin.*
(2) Avoid treated wood as the chemical treatment may harm worms and contaminate compost.

For more information on King County's waste reduction, recycling and composting programs, call the
Recycling and Composting Information Line at 296-4466.

King County