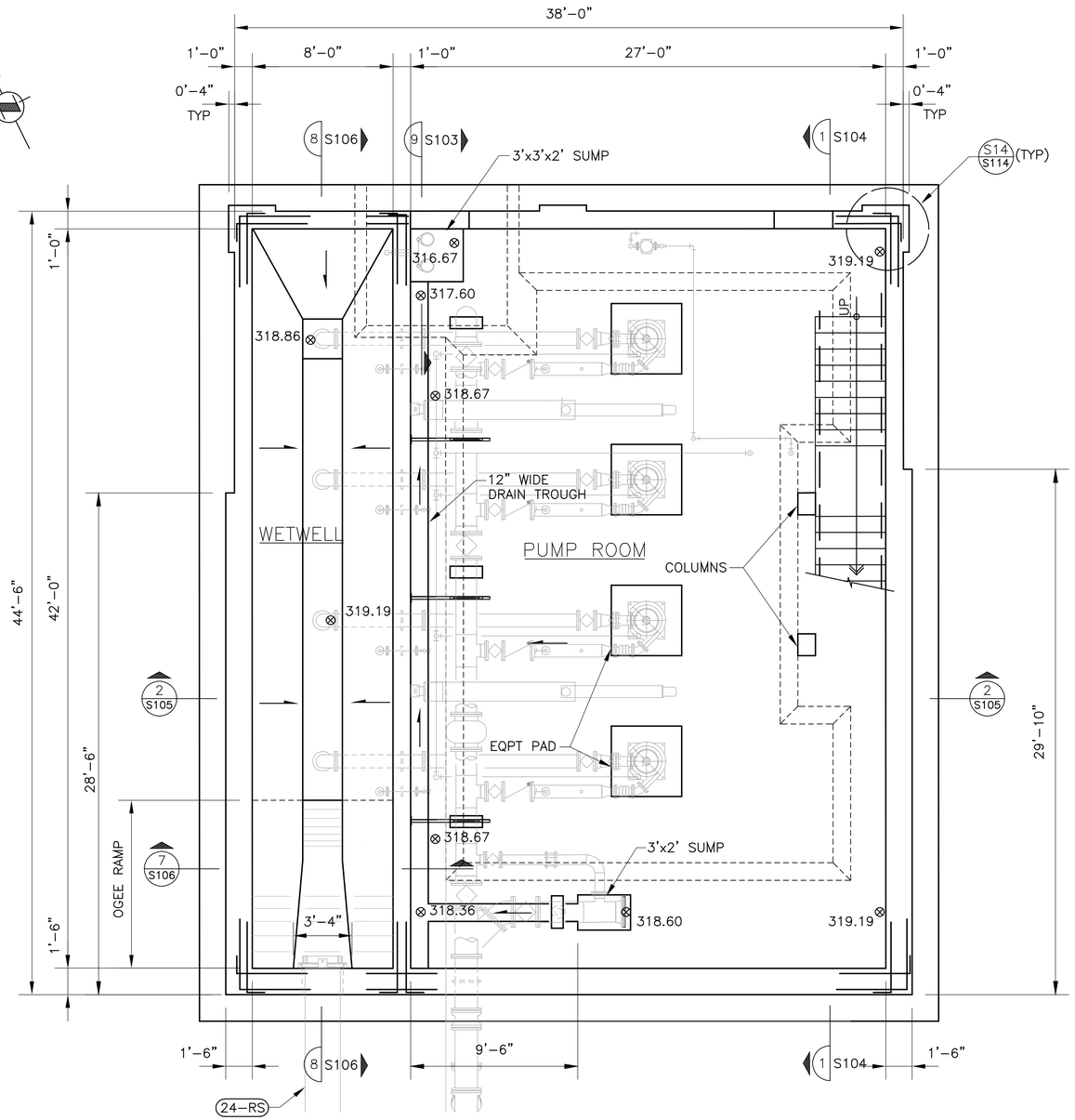

LOWER LEVEL FLOOR PLAN
SCALE: 1/4"=1'-0"

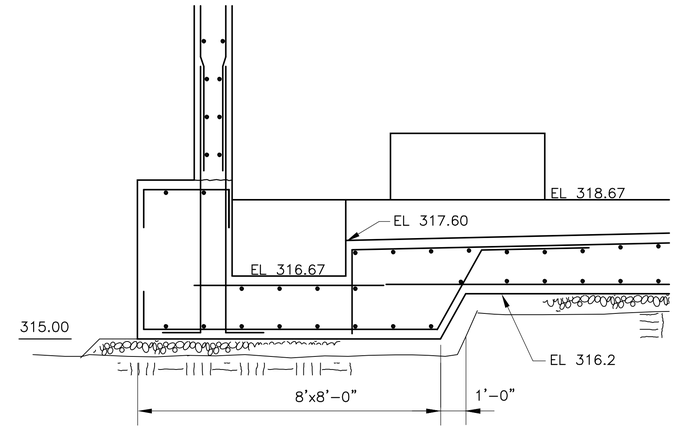

SECTION 9 / S103
SCALE: 1/2"=1'-0"

60% PRELIMINARY REVIEW FOR INFORMATION ONLY

No.	REVISION	BY	APP'D	DATE

CH2MHILL

SHINJI GOTO — STATE OF WASHINGTON — 35654 — REGISTERED PROFESSIONAL ENGINEER
EXPIRES 7/27/__

DESIGNED/DRAWN: R. FRIBERG	SCALE: AS SHOWN
PROJECT ENGINEER: S. GOTO	
DESIGN APPROVAL: S. GOTO	
PROJECT ACCEPTANCE: MH VANDERAA	CONTRACT NO:

King County

DEPARTMENT OF NATURAL RESOURCES & PARKS
HIDDEN LAKE
PUMP STATION REPLACEMENT
STRUCTURAL LOWER LEVEL FLOOR PLAN

DATE: AUG 2003
FILE NO:
DRAWING NO: S103
SHEET NO: 56 OF 140

ONE INCH
AT FULL SIZE, IF NOT ONE INCH SCALE ACCORDINGLY

C:\Users\thasting\JOBS\HIDDEN LAKE\Final_Design\Ground_Flr_Plan.DWG
Plotted: Sep 04, 2003 - 12:43pm by thasting